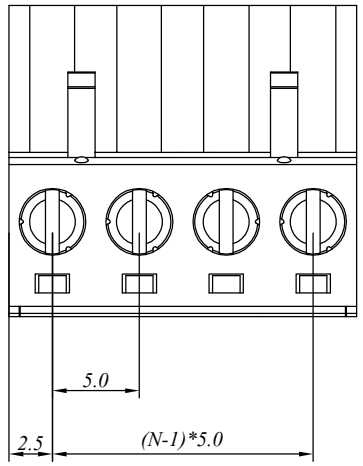

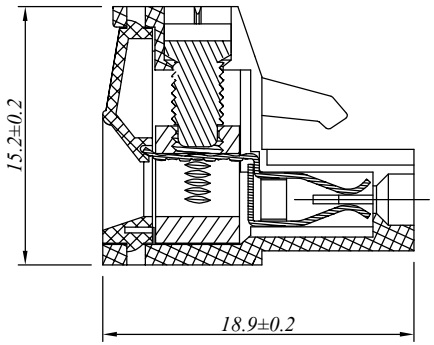

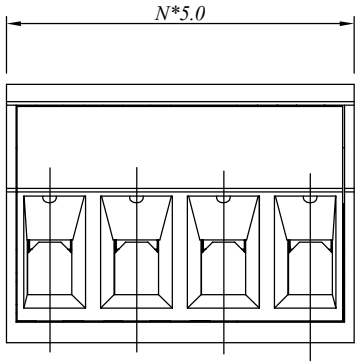

N=Number of contacts

材质于电镀/Material

塑件/Insulator body:	PA66, UL94V-0
方块/Contact(metal housing):	Brass ,Ni planted
螺丝/Terminal screw:	M3.0, Steel Zn planted
夹子/Clamp:	Phosphor bronze, Ni planted

电器性能/Electrical

参考标准/Standard:	UL	IEC
额定电压/Rated voltage:	300V	450V
额定电流/Rated current:	15A	20A
接触电阻/Contact resistance:	20mΩ (max)	
绝缘电阻/Insulation resistance:	500MΩ/500V	
耐电压/Withstanding voltage:	AC 2000V/1Min	
使用线径/Wire range:	14-28AWG, 2.5mm²	

机械性能/Mechanical

扭矩/Torque:	0.5Nm(4.5Lb.in)
温度范围/Temperature range:	-40°C to +105°C
剥线长度/Steip length:	7-8mm
瞬间温度/Max soldering:	+250°C, for 5 Sec

尺寸/Dimensions

间距/Pitch:	5.0mm
极数/Poles:	2-24P

慈溪万海电子有限公司

CIXI WANHAI ELECTRONICS CO., LTD.

PART. NAME: 2EDGK-5.00-XXP				TITLE:	
PART. NO.:				DWG NAME:	
APPROVED BY	CHECKED BY	DESIGNED BY	DRAWN BY	CUSTOM NO.:	Tolerance
				UNITS:mm	X. ±0.50
				SCALE3/1	X.X ±0.30
				REVISIONB3	X.XX ±0.10
					XX° ±1°