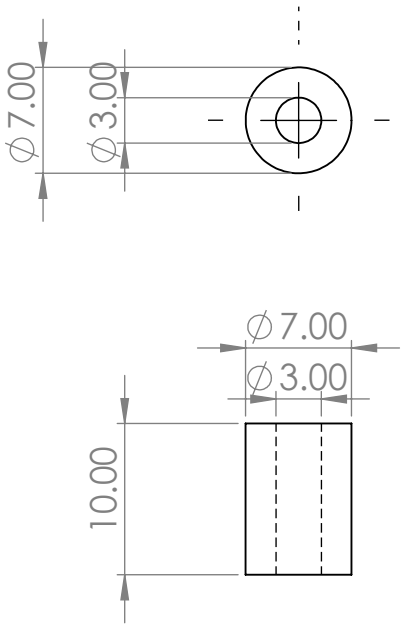

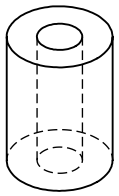

UNLESS OTHERWISE SPECIFIED: DIMENSIONS ARE IN MILLIMETERS SURFACE FINISH: TOLERANCES: ± 0.5 mm. LINEAR: ANGULAR: ± 0.1 Degree	FINISH:				DEBURR AND BREAK SHARP EDGES	DO NOT SCALE DRAWING / REVISION 0
	NAME	SIGNATURE	DATE			TITLE:
DRAWN	Nattapong		5-8-2026			
CHK'D	Noppon		5-8-2026			
APPV'D	Noppon		5-8-2026			
MFG						
Q.A				MATERIAL: ABS. White		DWG NO. Spacer M3 / A4
				WEIGHT:		SCALE:5:1 / SHEET 1 OF 1