CHIP COILS (CHIP INDUCTORS) LQW15AN□□□□0Z□
Murata Standard Reference Specification [AEC-Q200]

1. Scope

This reference specification applies to chip coils (chip inductors) LQW15AN_0Z series for automotive electronics based on AEC-Q200 except for power trains and safeties.

2. Part Numbering

(Ex.)

LQ	W	15	A	N	1N5	B	0	Z	D
Product ID	Structure	Dimension (L × W)	Application and characteristic	Category	Inductance	Tolerance	Performance	Category Z: Automotive	Packaging D: taping *B: bulk

*B: Bulk packing is also available (taping condition: however, products without reels are put in plastic bags).

3. Part Number and Rating

Operating temperature range	-55°C to +125°C
Storage temperature range	-55°C to +125°C

Customer Part number	Murata Part number	Inductance		Q (Min.)	DC resistance (Ω max.)	Self-resonant frequency (GHz min.)	Rated current (mA)	ESD Rank 6: 25 kV
		Nominal value (nH)	Tolerance					
	LQW15AN1N5B0ZD	1.5	B: ±0.1 nH	10	0.03	18.0	1000	6
	LQW15AN1N5C0ZD	1.5	C: ±0.2 nH	10	0.03	18.0	1000	6
	LQW15AN1N5D0ZD	1.5	D: ±0.5 nH	10	0.03	18.0	1000	6
	LQW15AN1N6C0ZD	1.6	C: ±0.2 nH	10	0.07	17.0	750	6
	LQW15AN1N6D0ZD	1.6	D: ±0.5 nH	10	0.07	17.0	750	6
	LQW15AN1N7C0ZD	1.7	C: ±0.2 nH	10	0.10	17.0	640	6
	LQW15AN1N7D0ZD	1.7	D: ±0.5 nH	10	0.10	17.0	640	6
	LQW15AN1N8C0ZD	1.8	C: ±0.2 nH	10	0.16	16.0	460	6
	LQW15AN1N8D0ZD	1.8	D: ±0.5 nH	10	0.16	16.0	460	6
	LQW15AN2N4B0ZD	2.4	B: ±0.1 nH	20	0.05	15.0	850	6
	LQW15AN2N4C0ZD	2.4	C: ±0.2 nH	20	0.05	15.0	850	6
	LQW15AN2N4D0ZD	2.4	D: ±0.5 nH	20	0.05	15.0	850	6
	LQW15AN2N5B0ZD	2.5	B: ±0.1 nH	20	0.05	15.0	850	6
	LQW15AN2N5C0ZD	2.5	C: ±0.2 nH	20	0.05	15.0	850	6
	LQW15AN2N5D0ZD	2.5	D: ±0.5 nH	20	0.05	15.0	850	6
	LQW15AN2N6B0ZD	2.6	B: ±0.1 nH	20	0.05	15.0	850	6
	LQW15AN2N6C0ZD	2.6	C: ±0.2 nH	20	0.05	15.0	850	6
	LQW15AN2N6D0ZD	2.6	D: ±0.5 nH	20	0.05	15.0	850	6
	LQW15AN2N7B0ZD	2.7	B: ±0.1 nH	20	0.05	15.0	850	6
	LQW15AN2N7C0ZD	2.7	C: ±0.2 nH	20	0.05	15.0	850	6
	LQW15AN2N7D0ZD	2.7	D: ±0.5 nH	20	0.05	15.0	850	6
	LQW15AN2N8B0ZD	2.8	B: ±0.1 nH	20	0.05	15.0	850	6
	LQW15AN2N8C0ZD	2.8	C: ±0.2 nH	20	0.05	15.0	850	6
	LQW15AN2N8D0ZD	2.8	D: ±0.5 nH	20	0.05	15.0	850	6
	LQW15AN2N9B0ZD	2.9	B: ±0.1 nH	20	0.07	15.0	750	6
	LQW15AN2N9C0ZD	2.9	C: ±0.2 nH	20	0.07	15.0	750	6
	LQW15AN2N9D0ZD	2.9	D: ±0.5 nH	20	0.07	15.0	750	6
	LQW15AN3N0B0ZD	3.0	B: ±0.1 nH	20	0.07	15.0	750	6
	LQW15AN3N0C0ZD	3.0	C: ±0.2 nH	20	0.07	15.0	750	6

Customer Part number	Murata Part number	Inductance		Q (Min.)	DC resistance (Ω max.)	Self-resonant frequency (GHz min.)	Rated current (mA)	ESD Rank 6: 25 kV
		Nominal value (nH)	Tolerance					
	LQW15AN3N0D0ZD	3.0	D: ±0.5 nH	20	0.07	15.0	750	6
	LQW15AN3N1B0ZD	3.1	B: ±0.1 nH	20	0.13	14.0	570	6
	LQW15AN3N1C0ZD	3.1	C: ±0.2 nH	20	0.13	14.0	570	6
	LQW15AN3N1D0ZD	3.1	D: ±0.5 nH	20	0.13	14.0	570	6
	LQW15AN3N2B0ZD	3.2	B: ±0.1 nH	15	0.17	14.0	500	6
	LQW15AN3N2C0ZD	3.2	C: ±0.2 nH	15	0.17	14.0	500	6
	LQW15AN3N2D0ZD	3.2	D: ±0.5 nH	15	0.17	14.0	500	6
	LQW15AN3N9B0ZD	3.9	B: ±0.1 nH	25	0.07	10.0	750	6
	LQW15AN3N9C0ZD	3.9	C: ±0.2 nH	25	0.07	10.0	750	6
	LQW15AN3N9D0ZD	3.9	D: ±0.5 nH	25	0.07	10.0	750	6
	LQW15AN4N1B0ZD	4.1	B: ±0.1 nH	25	0.07	10.0	750	6
	LQW15AN4N1C0ZD	4.1	C: ±0.2 nH	25	0.07	10.0	750	6
	LQW15AN4N1D0ZD	4.1	D: ±0.5 nH	25	0.07	10.0	750	6
	LQW15AN4N3B0ZD	4.3	B: ±0.1 nH	25	0.07	10.0	750	6
	LQW15AN4N3C0ZD	4.3	C: ±0.2 nH	25	0.07	10.0	750	6
	LQW15AN4N3D0ZD	4.3	D: ±0.5 nH	25	0.07	10.0	750	6
	LQW15AN4N4B0ZD	4.4	B: ±0.1 nH	25	0.07	8.0	750	6
	LQW15AN4N4C0ZD	4.4	C: ±0.2 nH	25	0.07	8.0	750	6
	LQW15AN4N4D0ZD	4.4	D: ±0.5 nH	25	0.07	8.0	750	6
	LQW15AN4N5B0ZD	4.5	B: ±0.1 nH	25	0.07	8.0	750	6
	LQW15AN4N5C0ZD	4.5	C: ±0.2 nH	25	0.07	8.0	750	6
	LQW15AN4N5D0ZD	4.5	D: ±0.5 nH	25	0.07	8.0	750	6
	LQW15AN4N6B0ZD	4.6	B: ±0.1 nH	25	0.07	8.0	750	6
	LQW15AN4N6C0ZD	4.6	C: ±0.2 nH	25	0.07	8.0	750	6
	LQW15AN4N6D0ZD	4.6	D: ±0.5 nH	25	0.07	8.0	750	6
	LQW15AN4N7B0ZD	4.7	B: ±0.1 nH	25	0.07	8.0	750	6
	LQW15AN4N7C0ZD	4.7	C: ±0.2 nH	25	0.07	8.0	750	6
	LQW15AN4N7D0ZD	4.7	D: ±0.5 nH	25	0.07	8.0	750	6
	LQW15AN4N8B0ZD	4.8	B: ±0.1 nH	25	0.07	8.0	750	6
	LQW15AN4N8C0ZD	4.8	C: ±0.2 nH	25	0.07	8.0	750	6
	LQW15AN4N8D0ZD	4.8	D: ±0.5 nH	25	0.07	8.0	750	6
	LQW15AN4N9B0ZD	4.9	B: ±0.1 nH	25	0.12	8.0	600	6
	LQW15AN4N9C0ZD	4.9	C: ±0.2 nH	25	0.12	8.0	600	6
	LQW15AN4N9D0ZD	4.9	D: ±0.5 nH	25	0.12	8.0	600	6
	LQW15AN5N0B0ZD	5.0	B: ±0.1 nH	25	0.12	8.0	600	6
	LQW15AN5N0C0ZD	5.0	C: ±0.2 nH	25	0.12	8.0	600	6
	LQW15AN5N0D0ZD	5.0	D: ±0.5 nH	25	0.12	8.0	600	6
	LQW15AN5N1B0ZD	5.1	B: ±0.1 nH	25	0.12	8.0	600	6
	LQW15AN5N1C0ZD	5.1	C: ±0.2 nH	25	0.12	8.0	600	6
	LQW15AN5N1D0ZD	5.1	D: ±0.5 nH	25	0.12	8.0	600	6
	LQW15AN5N8B0ZD	5.8	B: ±0.1 nH	25	0.09	8.0	700	6
	LQW15AN5N8C0ZD	5.8	C: ±0.2 nH	25	0.09	8.0	700	6
	LQW15AN5N8D0ZD	5.8	D: ±0.5 nH	25	0.09	8.0	700	6
	LQW15AN6N2B0ZD	6.2	B: ±0.1 nH	25	0.09	8.0	700	6
	LQW15AN6N2C0ZD	6.2	C: ±0.2 nH	25	0.09	8.0	700	6
	LQW15AN6N2D0ZD	6.2	D: ±0.5 nH	25	0.09	8.0	700	6

Customer Part number	Murata Part number	Inductance		Q (Min.)	DC resistance (Ω max.)	Self-resonant frequency (GHz min.)	Rated current (mA)	ESD Rank 6: 25 kV
		Nominal value (nH)	Tolerance					
	LQW15AN6N3B0ZD	6.3	B: ±0.1 nH	25	0.09	6.0	700	6
	LQW15AN6N3C0ZD	6.3	C: ±0.2 nH	25	0.09	6.0	700	6
	LQW15AN6N3D0ZD	6.3	D: ±0.5 nH	25	0.09	6.0	700	6
	LQW15AN6N4B0ZD	6.4	B: ±0.1 nH	25	0.09	6.0	700	6
	LQW15AN6N4C0ZD	6.4	C: ±0.2 nH	25	0.09	6.0	700	6
	LQW15AN6N4D0ZD	6.4	D: ±0.5 nH	25	0.09	6.0	700	6
	LQW15AN6N5B0ZD	6.5	B: ±0.1 nH	25	0.09	6.0	700	6
	LQW15AN6N5C0ZD	6.5	C: ±0.2 nH	25	0.09	6.0	700	6
	LQW15AN6N5D0ZD	6.5	D: ±0.5 nH	25	0.09	6.0	700	6
	LQW15AN6N6B0ZD	6.6	B: ±0.1 nH	25	0.09	6.0	700	6
	LQW15AN6N6C0ZD	6.6	C: ±0.2 nH	25	0.09	6.0	700	6
	LQW15AN6N6D0ZD	6.6	D: ±0.5 nH	25	0.09	6.0	700	6
	LQW15AN6N7B0ZD	6.7	B: ±0.1 nH	25	0.09	6.0	700	6
	LQW15AN6N7C0ZD	6.7	C: ±0.2 nH	25	0.09	6.0	700	6
	LQW15AN6N7D0ZD	6.7	D: ±0.5 nH	25	0.09	6.0	700	6
	LQW15AN6N8G0ZD	6.8	G: ±2%	25	0.09	6.0	700	6
	LQW15AN6N8H0ZD	6.8	H: ±3%	25	0.09	6.0	700	6
	LQW15AN6N8J0ZD	6.8	J: ±5%	25	0.09	6.0	700	6
	LQW15AN6N9G0ZD	6.9	G: ±2%	25	0.13	6.0	570	6
	LQW15AN6N9H0ZD	6.9	H: ±3%	25	0.13	6.0	570	6
	LQW15AN6N9J0ZD	6.9	J: ±5%	25	0.13	6.0	570	6
	LQW15AN7N0G0ZD	7.0	G: ±2%	25	0.13	6.0	570	6
	LQW15AN7N0H0ZD	7.0	H: ±3%	25	0.13	6.0	570	6
	LQW15AN7N0J0ZD	7.0	J: ±5%	25	0.13	6.0	570	6
	LQW15AN7N1G0ZD	7.1	G: ±2%	25	0.13	6.0	570	6
	LQW15AN7N1H0ZD	7.1	H: ±3%	25	0.13	6.0	570	6
	LQW15AN7N1J0ZD	7.1	J: ±5%	25	0.13	6.0	570	6
	LQW15AN7N2G0ZD	7.2	G: ±2%	25	0.13	6.0	570	6
	LQW15AN7N2H0ZD	7.2	H: ±3%	25	0.13	6.0	570	6
	LQW15AN7N2J0ZD	7.2	J: ±5%	25	0.13	6.0	570	6
	LQW15AN7N3G0ZD	7.3	G: ±2%	25	0.13	6.0	570	6
	LQW15AN7N3H0ZD	7.3	H: ±3%	25	0.13	6.0	570	6
	LQW15AN7N3J0ZD	7.3	J: ±5%	25	0.13	6.0	570	6
	LQW15AN7N5G0ZD	7.5	G: ±2%	25	0.13	6.0	570	6
	LQW15AN7N5H0ZD	7.5	H: ±3%	25	0.13	6.0	570	6
	LQW15AN7N5J0ZD	7.5	J: ±5%	25	0.13	6.0	570	6
	LQW15AN8N2G0ZD	8.2	G: ±2%	25	0.14	5.5	540	6
	LQW15AN8N2H0ZD	8.2	H: ±3%	25	0.14	5.5	540	6
	LQW15AN8N2J0ZD	8.2	J: ±5%	25	0.14	5.5	540	6
	LQW15AN8N6G0ZD	8.6	G: ±2%	25	0.14	5.5	540	6
	LQW15AN8N6H0ZD	8.6	H: ±3%	25	0.14	5.5	540	6
	LQW15AN8N6J0ZD	8.6	J: ±5%	25	0.14	5.5	540	6
	LQW15AN8N7G0ZD	8.7	G: ±2%	25	0.14	5.5	540	6
	LQW15AN8N7H0ZD	8.7	H: ±3%	25	0.14	5.5	540	6
	LQW15AN8N7J0ZD	8.7	J: ±5%	25	0.14	5.5	540	6
	LQW15AN8N8G0ZD	8.8	G: ±2%	25	0.14	5.5	540	6

Customer Part number	Murata Part number	Inductance		Q (Min.)	DC resistance (Ω max.)	Self-resonant frequency (GHz min.)	Rated current (mA)	ESD Rank 6: 25 kV
		Nominal value (nH)	Tolerance					
	LQW15AN8N8H0ZD	8.8	H: ±3%	25	0.14	5.5	540	6
	LQW15AN8N8J0ZD	8.8	J: ±5%	25	0.14	5.5	540	6
	LQW15AN8N9G0ZD	8.9	G: ±2%	25	0.14	5.5	540	6
	LQW15AN8N9H0ZD	8.9	H: ±3%	25	0.14	5.5	540	6
	LQW15AN8N9J0ZD	8.9	J: ±5%	25	0.14	5.5	540	6
	LQW15AN9N0G0ZD	9.0	G: ±2%	25	0.14	5.5	540	6
	LQW15AN9N0H0ZD	9.0	H: ±3%	25	0.14	5.5	540	6
	LQW15AN9N0J0ZD	9.0	J: ±5%	25	0.14	5.5	540	6
	LQW15AN9N1G0ZD	9.1	G: ±2%	25	0.14	5.5	540	6
	LQW15AN9N1H0ZD	9.1	H: ±3%	25	0.14	5.5	540	6
	LQW15AN9N1J0ZD	9.1	J: ±5%	25	0.14	5.5	540	6
	LQW15AN9N2G0ZD	9.2	G: ±2%	25	0.14	5.5	540	6
	LQW15AN9N2H0ZD	9.2	H: ±3%	25	0.14	5.5	540	6
	LQW15AN9N2J0ZD	9.2	J: ±5%	25	0.14	5.5	540	6
	LQW15AN9N3G0ZD	9.3	G: ±2%	25	0.14	5.5	540	6
	LQW15AN9N3H0ZD	9.3	H: ±3%	25	0.14	5.5	540	6
	LQW15AN9N3J0ZD	9.3	J: ±5%	25	0.14	5.5	540	6
	LQW15AN9N4G0ZD	9.4	G: ±2%	25	0.14	5.5	540	6
	LQW15AN9N4H0ZD	9.4	H: ±3%	25	0.14	5.5	540	6
	LQW15AN9N4J0ZD	9.4	J: ±5%	25	0.14	5.5	540	6
	LQW15AN9N5G0ZD	9.5	G: ±2%	25	0.14	5.5	540	6
	LQW15AN9N5H0ZD	9.5	H: ±3%	25	0.14	5.5	540	6
	LQW15AN9N5J0ZD	9.5	J: ±5%	25	0.14	5.5	540	6
	LQW15AN9N6G0ZD	9.6	G: ±2%	25	0.14	5.5	540	6
	LQW15AN9N6H0ZD	9.6	H: ±3%	25	0.14	5.5	540	6
	LQW15AN9N6J0ZD	9.6	J: ±5%	25	0.14	5.5	540	6
	LQW15AN9N7G0ZD	9.7	G: ±2%	25	0.14	5.5	540	6
	LQW15AN9N7H0ZD	9.7	H: ±3%	25	0.14	5.5	540	6
	LQW15AN9N7J0ZD	9.7	J: ±5%	25	0.14	5.5	540	6
	LQW15AN9N8G0ZD	9.8	G: ±2%	25	0.14	5.5	540	6
	LQW15AN9N8H0ZD	9.8	H: ±3%	25	0.14	5.5	540	6
	LQW15AN9N8J0ZD	9.8	J: ±5%	25	0.14	5.5	540	6
	LQW15AN9N9G0ZD	9.9	G: ±2%	25	0.14	5.5	540	6
	LQW15AN9N9H0ZD	9.9	H: ±3%	25	0.14	5.5	540	6
	LQW15AN9N9J0ZD	9.9	J: ±5%	25	0.14	5.5	540	6
	LQW15AN10NG0ZD	10	G: ±2%	25	0.17	5.5	500	6
	LQW15AN10NH0ZD	10	H: ±3%	25	0.17	5.5	500	6
	LQW15AN10NJ0ZD	10	J: ±5%	25	0.17	5.5	500	6
	LQW15AN11NG0ZD	11	G: ±2%	30	0.14	5.5	500	6
	LQW15AN11NH0ZD	11	H: ±3%	30	0.14	5.5	500	6
	LQW15AN11NJ0ZD	11	J: ±5%	30	0.14	5.5	500	6
	LQW15AN12NG0ZD	12	G: ±2%	30	0.14	5.5	500	6
	LQW15AN12NH0ZD	12	H: ±3%	30	0.14	5.5	500	6
	LQW15AN12NJ0ZD	12	J: ±5%	30	0.14	5.5	500	6
	LQW15AN13NG0ZD	13	G: ±2%	25	0.21	5.0	430	6
	LQW15AN13NH0ZD	13	H: ±3%	25	0.21	5.0	430	6

Customer Part number	Murata Part number	Inductance		Q (Min.)	DC resistance (Ω max.)	Self-resonant frequency (GHz min.)	Rated current (mA)	ESD Rank 6: 25 kV
		Nominal value (nH)	Tolerance					
	LQW15AN13NJ0ZD	13	J: ±5%	25	0.21	5.0	430	6
	LQW15AN15NG0ZD	15	G: ±2%	30	0.16	5.0	460	6
	LQW15AN15NH0ZD	15	H: ±3%	30	0.16	5.0	460	6
	LQW15AN15NJ0ZD	15	J: ±5%	30	0.16	5.0	460	6
	LQW15AN16NG0ZD	16	G: ±2%	25	0.24	4.5	370	6
	LQW15AN16NH0ZD	16	H: ±3%	25	0.24	4.5	370	6
	LQW15AN16NJ0ZD	16	J: ±5%	25	0.24	4.5	370	6
	LQW15AN18NG0ZD	18	G: ±2%	25	0.27	4.5	370	6
	LQW15AN18NH0ZD	18	H: ±3%	25	0.27	4.5	370	6
	LQW15AN18NJ0ZD	18	J: ±5%	25	0.27	4.5	370	6
	LQW15AN19NG0ZD	19	G: ±2%	25	0.27	4.5	370	6
	LQW15AN19NH0ZD	19	H: ±3%	25	0.27	4.5	370	6
	LQW15AN19NJ0ZD	19	J: ±5%	25	0.27	4.5	370	6
	LQW15AN20NG0ZD	20	G: ±2%	25	0.27	4.0	370	6
	LQW15AN20NH0ZD	20	H: ±3%	25	0.27	4.0	370	6
	LQW15AN20NJ0ZD	20	J: ±5%	25	0.27	4.0	370	6
	LQW15AN22NG0ZD	22	G: ±2%	25	0.30	4.0	310	6
	LQW15AN22NH0ZD	22	H: ±3%	25	0.30	4.0	310	6
	LQW15AN22NJ0ZD	22	J: ±5%	25	0.30	4.0	310	6
	LQW15AN23NG0ZD	23	G: ±2%	25	0.30	3.8	310	6
	LQW15AN23NH0ZD	23	H: ±3%	25	0.30	3.8	310	6
	LQW15AN23NJ0ZD	23	J: ±5%	25	0.30	3.8	310	6
	LQW15AN24NG0ZD	24	G: ±2%	25	0.52	3.5	280	6
	LQW15AN24NH0ZD	24	H: ±3%	25	0.52	3.5	280	6
	LQW15AN24NJ0ZD	24	J: ±5%	25	0.52	3.5	280	6
	LQW15AN27NG0ZD	27	G: ±2%	25	0.52	3.5	280	6
	LQW15AN27NH0ZD	27	H: ±3%	25	0.52	3.5	280	6
	LQW15AN27NJ0ZD	27	J: ±5%	25	0.52	3.5	280	6
	LQW15AN30NG0ZD	30	G: ±2%	25	0.58	3.3	270	6
	LQW15AN30NH0ZD	30	H: ±3%	25	0.58	3.3	270	6
	LQW15AN30NJ0ZD	30	J: ±5%	25	0.58	3.3	270	6
	LQW15AN33NG0ZD	33	G: ±2%	25	0.63	3.2	260	6
	LQW15AN33NH0ZD	33	H: ±3%	25	0.63	3.2	260	6
	LQW15AN33NJ0ZD	33	J: ±5%	25	0.63	3.2	260	6
	LQW15AN36NG0ZD	36	G: ±2%	25	0.63	3.1	260	6
	LQW15AN36NH0ZD	36	H: ±3%	25	0.63	3.1	260	6
	LQW15AN36NJ0ZD	36	J: ±5%	25	0.63	3.1	260	6
	LQW15AN39NG0ZD	39	G: ±2%	25	0.70	3.0	250	6
	LQW15AN39NH0ZD	39	H: ±3%	25	0.70	3.0	250	6
	LQW15AN39NJ0ZD	39	J: ±5%	25	0.70	3.0	250	6
	LQW15AN40NG0ZD	40	G: ±2%	25	0.70	3.0	250	6
	LQW15AN40NH0ZD	40	H: ±3%	25	0.70	3.0	250	6
	LQW15AN40NJ0ZD	40	J: ±5%	25	0.70	3.0	250	6
	LQW15AN43NG0ZD	43	G: ±2%	25	0.70	3.0	250	6
	LQW15AN43NH0ZD	43	H: ±3%	25	0.70	3.0	250	6
	LQW15AN43NJ0ZD	43	J: ±5%	25	0.70	3.0	250	6

Customer Part number	Murata Part number	Inductance		Q (Min.)	DC resistance (Ω max.)	Self-resonant frequency (GHz min.)	Rated current (mA)	ESD Rank 6: 25 kV
		Nominal value (nH)	Tolerance					
	LQW15AN47NG0ZD	47	G: ±2%	25	1.08	2.9	210	6
	LQW15AN47NH0ZD	47	H: ±3%	25	1.08	2.9	210	6
	LQW15AN47NJ0ZD	47	J: ±5%	25	1.08	2.9	210	6
	LQW15AN51NG0ZD	51	G: ±2%	25	1.08	2.85	210	6
	LQW15AN51NH0ZD	51	H: ±3%	25	1.08	2.85	210	6
	LQW15AN51NJ0ZD	51	J: ±5%	25	1.08	2.85	210	6
	LQW15AN56NG0ZD	56	G: ±2%	25	1.17	2.8	200	6
	LQW15AN56NH0ZD	56	H: ±3%	25	1.17	2.8	200	6
	LQW15AN56NJ0ZD	56	J: ±5%	25	1.17	2.8	200	6
	LQW15AN62NG0ZD	62	G: ±2%	20	1.82	2.6	145	6
	LQW15AN62NH0ZD	62	H: ±3%	20	1.82	2.6	145	6
	LQW15AN62NJ0ZD	62	J: ±5%	20	1.82	2.6	145	6
	LQW15AN68NG0ZD	68	G: ±2%	20	1.96	2.5	140	6
	LQW15AN68NJ0ZD	68	J: ±5%	20	1.96	2.5	140	6
	LQW15AN72NG0ZD	72	G: ±2%	20	2.10	2.5	135	6
	LQW15AN72NJ0ZD	72	J: ±5%	20	2.10	2.5	135	6
	LQW15AN75NG0ZD	75	G: ±2%	20	2.10	2.4	135	6
	LQW15AN75NJ0ZD	75	J: ±5%	20	2.10	2.4	135	6
	LQW15AN82NG0ZD	82	G: ±2%	20	2.24	2.3	130	6
	LQW15AN82NJ0ZD	82	J: ±5%	20	2.24	2.3	130	6
	LQW15AN91NG0ZD	91	G: ±2%	20	2.38	2.1	125	6
	LQW15AN91NJ0ZD	91	J: ±5%	20	2.38	2.1	125	6
	LQW15ANR10J0ZD	100	J: ±5%	20	2.52	1.5	120	6
	LQW15ANR12J0ZD	120	J: ±5%	20	2.66	1.0	110	6

4. Testing Conditions

Unless otherwise specified	Temperature: ordinary temperature (15°C to 35°C) Humidity: ordinary humidity [25% to 85% (RH)]
In case of doubt	Temperature: 20°C±2°C Humidity: 60% to 70% (RH) Atmospheric pressure: 86 kPa to 106 kPa

5. Appearance and Dimensions

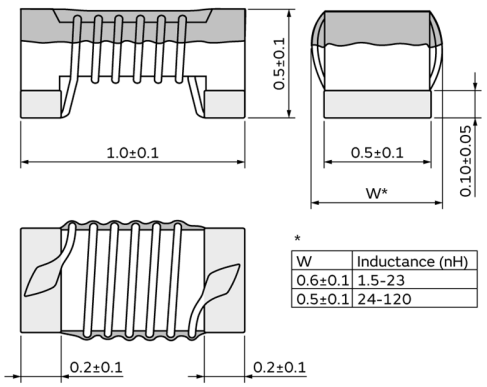

*

W	Inductance (nH)
0.6±0.1	1.5-23
0.5±0.1	24-120

(in mm)

Unit mass (typical value): 0.0008 g

6. Marking

No marking.

7. Electrical Performance

<table>
<tr><th>No.</th><th>Item</th><th>Specification</th><th>Test method</th></tr>
<tr><td>7.1</td><td>Inductance</td><td>Meet chapter 3 ratings.</td><td rowspan="2">Measuring equipment: Keysight E4991A or the equivalent
Measuring frequency:
<table>
<tr><td>Inductance</td><td colspan="2">100 MHz</td></tr>
<tr><td rowspan="3">Q</td><td>250 MHz</td><td>1.5 nH to 43 nH</td></tr>
<tr><td>200 MHz</td><td>47 nH to 68 nH</td></tr>
<tr><td>150 MHz</td><td>72 nH to 120 nH</td></tr>
</table>
Measuring conditions:
Measurement signal level: Approx. 0 dBm
Measurement terminal distance: 0.5 mm
Electrical length: 10.0 mm
Measuring fixture: Keysight 16197A
Position the chip coil under test as shown in the measuring example below and connect it to the electrode by applying weight.
Measurement example:
 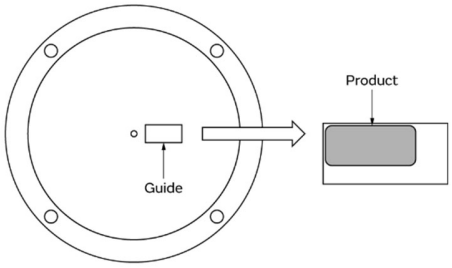

Measuring method: see "Electrical performance: Measuring method for inductance/Q" in the chapter "15. Appendix".</td></tr>
<tr><td>7.2</td><td>Q</td><td>Meet chapter 3 ratings.</td></tr>
<tr><td>7.3</td><td>DC resistance</td><td>Meet chapter 3 ratings.</td><td>Measuring equipment: digital multimeter</td></tr>
<tr><td>7.4</td><td>Self-resonant frequency</td><td>Meet chapter 3 ratings.</td><td>Measuring equipment: Keysight N5230A or the equivalent</td></tr>
<tr><td>7.5</td><td>Rated current</td><td>Product temperature rise: 20°C max.</td><td>Apply the rated current specified in chapter 3.</td></tr>
</table>

8. AEC-Q200 Requirement

8.1 Performance [based on table 5 for magnetics (inductors/transformer) AEC-Q200 Rev. D issued June 1, 2010]

AEC-Q200			Murata specification/deviation
No.	Stress	Test method	
3	High temperature exposure	1000 h at 125°C Set for 24 h at room condition, then measured.	Meet table A after testing. Table A Appearance: No damage Inductance change rate (at 100 MHz): Within ±5%
4	Temperature cycling	1000 cycles -40°C to +125°C Set for 24 h at room condition, then measured.	Meet table A after testing.
7	Biased humidity	1000 h at 85°C, 85% (RH). Unpowered. Set for 24 h at room condition, then measured.	Meet table A after testing.
8	Operational life	Apply 125°C 1000 h Set for 24 h at room condition, then measured.	Meet table A after testing.
9	External visual	Visual inspection	No abnormalities
10	Physical dimension	Meet chapter 5, "Appearance and Dimensions".	No defects
12	Resistance to solvents	Per MIL-STD-202 Method 215	Not applicable
13	Mechanical shock	Per MIL-STD-202 Method 213 Condition C: 100 g's (0.98 N), 6 ms, half sine, 12.3 ft/s	Meet table A after testing.
14	Vibration	5 g's (0.049 N) for 20 min, 12 cycles each of 3 orientations Test from 10 Hz to 2000 Hz	Meet table A after testing.
15	Resistance to soldering heat	No-heating Solder temperature 260°C±5°C Immersion time 10 s	Pre-heating: 150°C±10°C, 60 s to 90 s Meet table A after testing.
17	ESD	Per AEC-Q200-002	ESD rank: Refer to chapter 3 ratings. Meet table A after testing.
18	Solderbility	Per J-STD-002	Method b: not applicable 95% of the terminations is to be soldered (except exposed wire).
19	Electrical characterization	Measured: inductance	No defects
20	Flammability	Per UL-94	Not applicable
21	Board flex	Epoxy-PCB (1.6 mm) Deflection 2 mm (min.) Holding time 60 s	Meet table B after testing. Table B Appearance: No damage DC resistance change rate: Within ±10%
22	Terminal strength	Per AEC-Q200-006 A force of 17.7 N for 60 s	No defects Murata deviation request: 5 N for 60 s

9. Specification of Packaging

9.1 Appearance and dimensions of tape (8 mm width/paper tape)

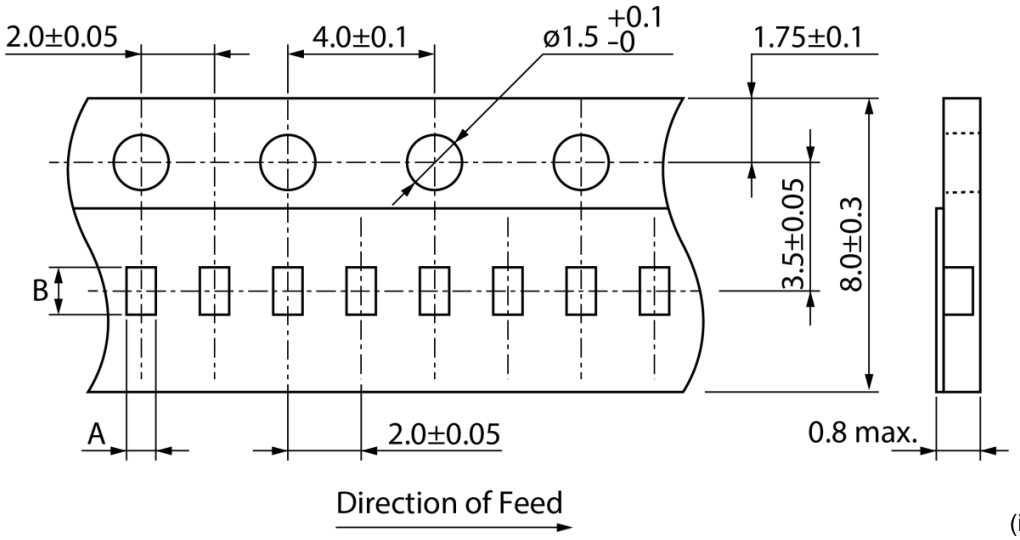

(in mm)

Inductance	A* (mm) (Dimensional tolerance ±0.03)	B* (mm) (Dimensional tolerance ±0.03)
1N5, 2N4 to 2N8, 3N9 to 4N8, 5N8 to 6N8, 8N2 to 9N9, 11N, 12N, 15N	0.69	1.18
1N6 to 1N8, 2N9, 3N0, 3N1, 3N2, 4N9 to 5N1, 6N9 to 7N5, 10N, 13N, 16N to 23N, R10, R12	0.66	1.18
24N to 91N	0.64	1.18

*Typical value

9.2 Taping specifications

Packing quantity (Standard quantity)	10000 pcs/reel
Packing method	The products are placed in embossed cavities of a base tape and sealed by a cover tape.
Feed hole position	The feed holes on the base tape are on the right side when the cover tape is pulled toward the user.
Joint	The base tape and the cover tape are seamless.
Number of missing products	Number of missing products within 0.025% of the number per reel or 1 pc., whichever is greater, and are not continuous. The specified quantity per reel is kept.

9.3 Break down force of tape

Break down force of cover tape	5 N min.

9.4 Peeling off force of cover tape

Speed of peeling off	300 mm/min
Peeling off force	0.1 N to 0.6 N (The lower limit is for typical value.)

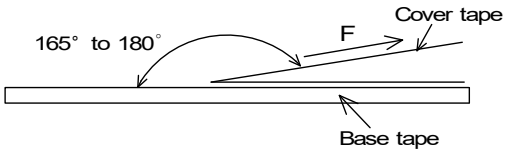

9.5 Dimensions of leader section, trailer section and reel

A vacant section is provided in the leader (start) section and trailer (end) section of the tape for the product. The leader section is further provided with an area consisting only of the cover tape (or top tape). (See the diagram below.)

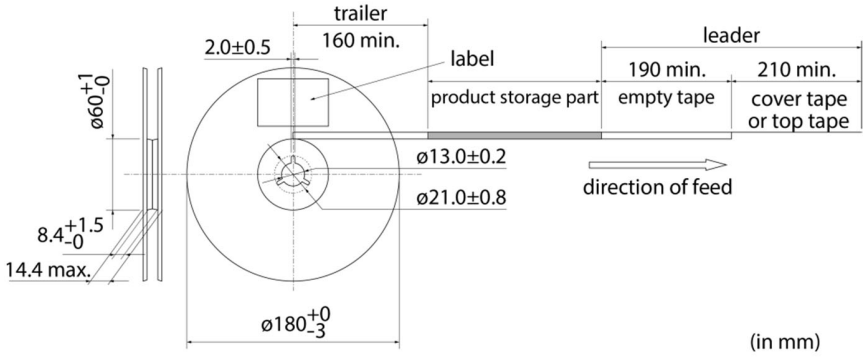

9.6 Marking for reel

Customer part number, Murata part number, inspection number (*1), RoHS marking (*2), quantity, etc.

*1 Expression of inspection No.: □□ (1) ○○○○ (2) ◇◇◇ (3)	(1) Factory code (2) Date First digit: year/last digit of year Second digit: month/Jan. to Sep.→1 to 9, Oct. to Dec.→O, N, D Third, Fourth digit: day (3) Serial No.
*2 Expression of RoHS marking: ROHS- Y (1) (△) (2)	(1) RoHS regulation conformity (2) Murata classification number

9.7 Marking on outer box (corrugated box)

Customer name, purchasing order number, customer part number, Murata part number, RoHS marking (*2), quantity, etc.

9.8 Specification of outer box

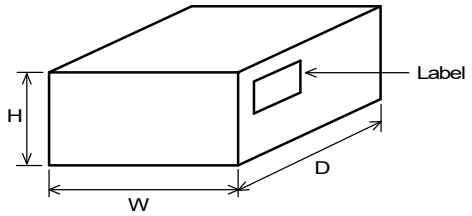

Dimensions of outer box (mm)			Standard reel quantity in outer box (reel)
W	D	H	
186	186	93	5
* Above outer box size is typical. It depends on a quantity of an order.			

10. ⚠Caution

10.1 Restricted applications

Please contact us before using our products for the applications listed below which require especially high reliability for the prevention of defects which might directly cause damage to the third party's life, body or property.

(1) Aircraft equipment
(2) Aerospace equipment
(3) Undersea equipment
(4) Power plant control equipment
(5) Medical equipment
(6) Disaster/crime prevention equipment
(7) Traffic signal equipment
(8) Transportation equipment (trains, ships, etc.)
(9) Data-processing equipment
(10) Applications of similar complexity and/or reliability requirements to the applications listed in the above

10.2 Precautions on rating

Do not use the products in excess of their rated current. Doing so may cause the product to generate heat, resulting in short circuit between wires, wire breakage, or melted solder, which may cause dropping of parts.

10.3 Fail-safe

Be sure to provide an appropriate fail-safe function on your product to prevent a second damage that may be caused by the abnormal function or the failure of our product.

10.4 Corrosive gas

Please refrain from use since contact with environments with corrosive gases (sulfur gas [hydrogen sulfide, sulfur dioxide, etc.], chlorine, ammonia, etc.) or oils (cutting oil, silicone oil, etc.) that have come into contact with the previously stated corrosive gas environment will result in deterioration of product quality or an open from deterioration due to corrosion of product electrode, etc. We will not bear any responsibility for use under these environments.

11. Precautions for Use

This product is for use only with reflow soldering. It is designed to be mounted by soldering. If you want to use other mounting method, for example, using a conductive adhesive, please consult us beforehand.
Also, if repeatedly subjected to temperature cycles or other thermal stress, due to the difference in the coefficient of thermal expansion with the mounting substrate, the solder (solder fillet part) in the mounting part may crack.
The occurrence of cracks due to thermal stress is affected by the size of the land where mounted, the solder volume, and the heat dissipation of the mounting substrate. Carefully design it when a large change in ambient temperature is assumed.

11.1 Land dimensions

The following diagram shows the recommended land dimensions for reflow soldering.
The land dimensions are designed in consideration of electrical characteristics and mountability. Use of other land dimensions may preclude achievement of performance. In some cases, it may result in poor solderability, including positional shift. If you use other land pattern, consider it adequately.

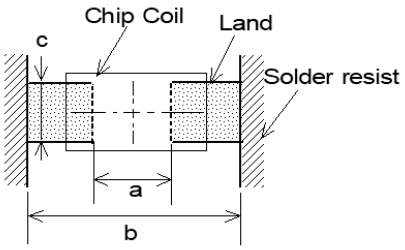

a	0.50
b	1.2
c	0.65

(in mm)

11.2 Flux and solder used

Flux	• Use a rosin-based flux that includes an activator with a chlorine conversion value of 0.06(wt)% to 0.1(wt)%. • Do not use a highly acidic flux with a halide content exceeding 0.2(wt)% (chlorine conversion value). • Do not use a water-soluble flux.
Solder	• Use Sn-3.0Ag-0.5Cu solder. • Standard thickness of solder paste: 100 μm to 150 μm

If you want to use a flux other than the above, please consult our technical department.

11.3 Soldering conditions (reflow)

- Pre-heating should be in such a way that the temperature difference between solder and product surface is limited to 150°C max.
  Cooling into solvent after soldering also should be in such a way that the temperature difference is limited to 100°C max.
  Insufficient pre-heating may cause cracks on the product, resulting in the deterioration of product quality.
- Standard soldering profile and the limit soldering profile is as follows.
  The excessive limit soldering conditions may cause leaching of the electrode and/or resulting in the deterioration of product quality.

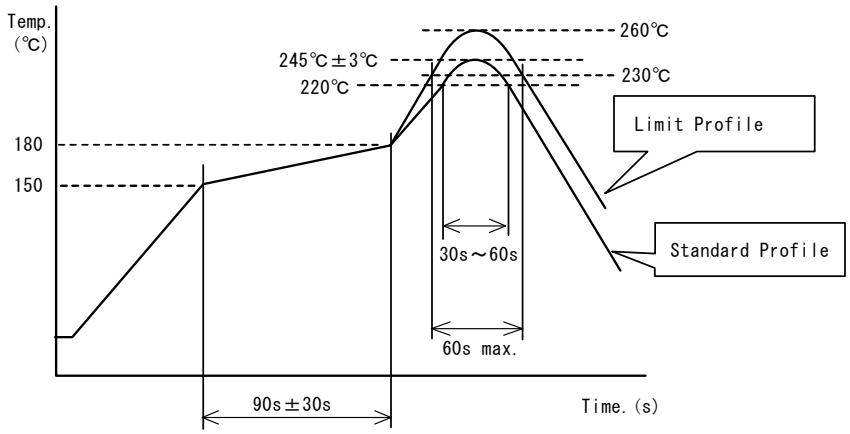

	Standard profile	Limit profile
Pre-heating	150°C to 180°C/90 s±30 s	150°C to 180°C/90 s±30 s
Heating	Above 220°C/30 s to 60 s	Above 230°C/60 s max.
Peak temperature	245°C±3°C	260°C/10 s
Number of reflow cycles	2 times	2 times

11.4 Reworking with soldering iron

The following requirements must be met to rework a soldered product using a soldering iron.

Item	Requirement
Pre-heating	150°C/approx. 1 min
Tip temperature of soldering iron	350°C max.
Power consumption of soldering iron	80 W max.
Tip diameter of soldering iron	ø3 mm max.
Soldering time	3 s (+1 s, -0 s)
Number of reworking operations	2 times max.
* Avoid a direct contact of the tip of the soldering iron with the product. Such a direction contact may cause cracks in the ceramic body due to thermal shock.	

11.5 Solder volume

Solder shall be used not to increase the volume too much.

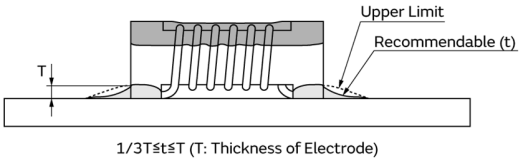

An increased solder volume increases mechanical stress on the product. Exceeding solder volume may cause the failure of mechanical or electrical performance.

11.6 Product's location

The following shall be considered when designing and laying out PCBs.

(1) PCB shall be designed so that products are not subject to mechanical stress due to warping the board.
[Products direction]
Products shall be located in the sideways direction (length: a < b) to the mechanical stress.

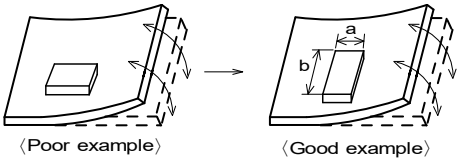

(2) Components location on PCB separation
It is effective to implement the following measures, to reduce stress in separating the board.
It is best to implement all of the following three measures; however, implement as many measures as possible to reduce stress.

Contents of measures	Stress level
(1) Turn the mounting direction of the component parallel to the board separation surface.	A > D*1
(2) Add slits in the board separation part.	A > B
(3) Keep the mounting position of the component away from the board separation surface.	A > C
*1 A > D is valid when stress is added vertically to the perforation as with hand separation. If a cutting disc is used, stress will be diagonal to the PCB, therefore A > D is invalid.	

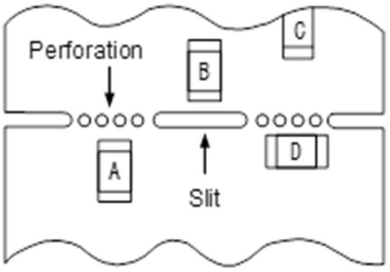

(3) Mounting components near screw holes
When a component is mounted near a screw hole, it may be affected by the board deflection that occurs during the tightening of the screw.
Mount the component in a position as far away from the screw holes as possible.

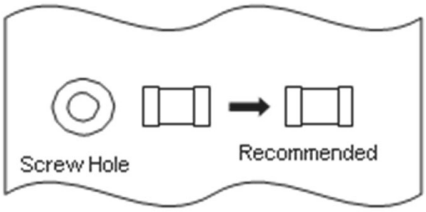

11.7 Handling of substrate

After mounting products on a substrate, do not apply any stress to the product caused by bending or twisting to the substrate when cropping the substrate, inserting and removing a connector from the substrate or tightening screw to the substrate. Excessive mechanical stress may cause cracking in the product.

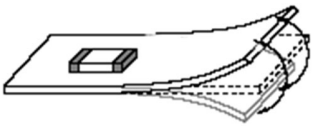

Bending

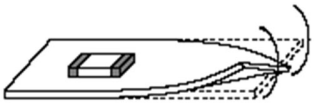

Twisting

11.8 Cleaning

The product shall be cleaned under the following conditions.

(1) The cleaning temperature shall be 60°C max. If isopropyl alcohol (IPA) is used, the cleaning temperature shall be 40°C max.

(2) Perform ultrasonic cleaning under the following conditions. Exercise caution to prevent resonance phenomenon in mounted products and the PCB.

Item	Requirement
Power	20 W/L max.
Time	5 min max.
Frequency	28 kHz to 40 kHz

(3) Cleaner
Alcohol-based cleaner: IPA
Aqueous agent: PINE ALPHA ST-100S

(4) There shall be no residual flux or residual cleaner. When using aqueous agent, rinse the product with deionized water adequately and completely dry it so that no cleaner is left.

* For other cleaning, consult our technical department.

11.9 Storage and transportation

Storage period	Use the product within 12 months after delivery. If you do not use the product for more than 12 months, check solderability before using it.
Storage conditions	• The products shall be stored in a room not subject to rapid changes in temperature and humidity. The recommended temperature range is -10°C to +40°C. The recommended relative humidity range is 15% to 85%. Keeping the product in corrosive gases, such as sulfur, chlorine gas or acid, oxidizes the electrode, resulting in poor solderability or corrosion of the coil wire of the product. • Do not keep products in bulk packaging. Doing so may cause collision between the products or between the products and other products, resulting in core chipping or wire breakage. • Do not place the products directly on the floor; they should be placed on a palette so that they are not affected by humidity or dust. • Avoid keeping the products in a place exposed to direct sunlight, heat or vibration.
Transportation	Excessive vibration and impact reduces the reliability of the products. Exercise caution when handling the products.

11.10 Resin coating

The inductance value may change due to high cure-stress of resin to be used for coating/molding products.
A wire breakage issue may occur by mechanical stress caused by the resin, amount/cured shape of resin, or operating condition etc. Some resin contains some impurities or chloride possible to generate chlorine by hydrolysis under some operating condition may cause corrosion of wire of coil, leading to wire breakage.
So, please pay your careful attention when you select resin in case of coating/molding the products with the resin.
Prior to use the coating resin, please make sure no reliability issue is observed by evaluating products mounted on your board.

11.11 Handling of product

• Sharp material such as a pair of tweezers or other material such as bristles of cleaning brush, shall not be touched to the winding portion to prevent the breaking of wire.
• Mechanical shock should not be applied to the products mounted on the board to prevent the breaking of the core.

11.12 Handling with mounting equipment

• With some types of mounting equipment, a support pin pushes up the product from the bottom of the base (paper) tape when the product is sucked with the pick-up nozzle.
When using this type of equipment, detach the support pin to prevent the breaking of wire on the product.
• In some cases, the laser recognition function of the mounting equipment may not recognize this product correctly.
Please contact us when using laser recognition. (There is no problem with the permeation and reflection type.)

12. ⚠Note

(1) Please make sure that your product has been evaluated in view of your specifications with our product being mounted to your product.

(2) You are requested not to use our product deviating from the reference specifications.

(3) The contents of this reference specification are subject to change without advance notice. Please approve our product specifications or transact the approval sheet for product specifications before ordering.

13. Appendix

Electrical performance: Measuring method for inductance/Q (Q measurement is applicable only when the Q value is included in the rating table.)
Perform measurement using the method described below. (Perform correction for the error deriving from the measuring terminal.)

(1) Residual elements and stray elements of the measuring terminal can be expressed by the F parameter for the 2-pole terminal as shown in the figure below.

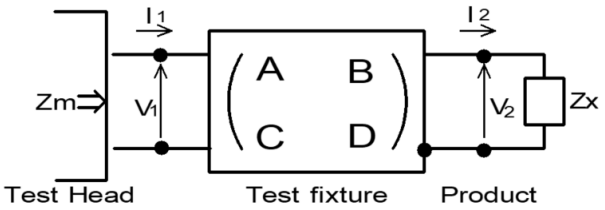

$$\begin{pmatrix} V_1 \\ I_1 \end{pmatrix} = \begin{pmatrix} A & B \\ C & D \end{pmatrix} \begin{pmatrix} V_2 \\ I_2 \end{pmatrix}$$

(2) The product's impedance value (Zx) and measured impedance value (Zm) can be expressed as shown below, by using the respective current and voltage for input/output.

$$Zm=\frac{V_1}{I_1} \qquad Zx=\frac{V_2}{I_2}$$

(3) Thus, the relationship between the product's impedance value (Zx) and measured impedance value (Zm) is as follows.

$Zx=\alpha\frac{Zm-\beta}{1-Zm\Gamma}$	Here, α = D/A = 1 β = B/D = Zsm - (1 - Yom Zsm) Zss Γ = C/A = Yom Zsm: measured impedance of short chip Zss: residual impedance of short chip (0.556 nH) Yom: measured admittance when measuring terminal is open

(4) Calculate inductance Lx and Qx using the equations shown below.

$Lx=\frac{Im\ (Zx)}{2\pi f}$	Lx: inductance of chip coil Qx: Q of chip coil f: measuring frequency
$Qx=\frac{Im\ (Zx)}{Re\ (Zx)}$	

RF Inductors for Automotive Part Numbering

(Part Number)

LQ	G	15	H	H	1N0	S	0	2	D
❶	❷	❸	❹	❺	❻	❼	❽	❾	❿

❶Product ID

Product ID	
LQ	Chip Inductors (Chip Coils)

❷Structure

Code	Structure
G	Multilayer Type (Air-core Inductors (Coils))
H	Wire Wound Type (Ferrite Core)
P	Film Type
W	Wire Wound Type (Air-core Inductors (Coils))

❸Dimensions (LxW)

Code	Nominal Dimensions (LxW)	Size Code (in inch)
03	0.6x0.3mm	0201
15	1.0x0.5mm	0402
18	1.6x0.8mm	0603
31	3.2x1.6mm	1206

❹Applications and Characteristics

Code	Series	Applications and Characteristics
H	LQG	Multilayer Air-core Inductors (Coils)
W		High Q Type
T	LQP	Film Type (Low DC Resistance Type)
A	LQW	High Q Type (UHF-SHF)
C		for Choke (Coating Type)
H	LQH	for High-frequency Resonant Circuit

❺Category

Code	Series	Category	
N	LQP/LQW	Standard Type	
S	LQW		
Z	LQG/LQH	Automotive	Infotainment
H	LQG		Powertrain/Safety

❻Inductance

Expressed by three-digit alphanumerics. The unit is micro-henry (μH). The first and second figures are significant digits, and the third figure expresses the number of zeros that follow the two figures. If there is a decimal point, it is expressed by the capital letter "**R**." In this case, all figures are significant digits. If inductance is less than 0.1μH, the inductance code is expressed by a combination of two figures and the capital letter "**N**," and the unit of inductance is nano-henry (nH). The capital letter "**N**" indicates the unit of "nH," and also expresses a decimal point. In this case, all figures are significant digits. For those products whose inductance values are specified using three designated digits, these values may be indicated using the closest two digits instead.

❼Inductance Tolerance

Code	Inductance Tolerance
B	±0.1nH
C	±0.2nH
D	±0.5nH
G	±2%
H	±3%
J	±5%
K	±10%
S	±0.3nH

❽Features

Code	Features	Series
0	Standard Type	LQG/LQH/LQP/LQW
1	High-Q or Low DC Resistance	LQW15A/15C/18A
8	Low Resistance/ Large Current Type	LQW15A/18A
H	Automotive Powertrain/ Safety	LQP03T
Z	Automotive Infotainment	LQP03T

❾Electrode

•Lead (Pb) Free

Code	Electrode	Series
0	Sn	LQG18H
2		LQG15H/LQG15W/LQP03T
3	LF Solder	LQH
Z	Automotive Infotainment	LQW15A/15C/18A

❿Packaging

Code	Packaging
K	Embossed Taping (ø330mm Reel)
L	Embossed Taping (ø180mm Reel)
B	Bulk
J	Paper Taping (ø330mm Reel)
D	Paper Taping (ø180mm Reel)