Americas

Atlanta - 678-957-9614
Austin - 512-257-3370
Boston - 774-760-0087
Chicago - 630-285-0071
Cleveland - 216-447-0464
Dallas - 972-818-7423
Detroit - 248-848-4000
Houston - 281-894-5983
Indianapolis - 317-773-8323
Los Angeles - 949-462-9523
New York - 631-435-6000
Phoenix - 480-792-7200
Raleigh - 919-844-7510
Santa Jose - 408-735-9110
Toronto - 905-695-1980

Europe

Austria - Wels - 43-7242-2244-39
Denmark - Copenhagen - 45-4450-2828
Finland - Espoo - 358-9-4520-820
France - Paris - 33-1-69-53-63-20
Germany - Garching - 49-8931-9700
Germany - Haan - 49-2129-3766400
Germany - Heilbronn - 49-7131-72400
Germany - Karlsruhe - 49-721-625370
Germany - Munich - 49-89-627-144-0
Germany - Rosenheim 49-8031-354-560
Israel - Ra'anana - 972-9-744-7705
Italy - Milan - 39-0331-742611
Italy - Padova - 39-049-7625286
Netherlands - Drunen - 31-416-690399
Norway - Trondheim - 47-7288-4388
Poland - Warsaw - 48-22-3325737
Romania - Bucharest - 40-21-407-87-50
Spain - Madrid - 34-91-708-08-90
Sweden - Gothenberg - 46-31-704-60-40
Sweden - Stockholm - 46-8-5090-4654
UK - Wokingham - 44-118-921-5800

Asia/Pacific

Australia - Sydney - 61-2-9868-6733
China - Beijing - 86-10-8569-7000
China - Chengdu - 86-28-8665-5511
China - Chongqing - 86-23-8980-9588
China - Donguan - 86-769-8702-9880
China - Guangzhou - 86-20-8755-8029
China - Hangzhou - 86-571-8792-8115
China - Hong Kong SAR - 852-2943-5100
China - Nanjing- 86-25-8473-2460
China - Qingdao - 86-532-8502-7355
China - Shanghai - 86-21-3326-8000
China - Shenyang - 86-24-2334-2829
China - Shenzhen - 86-755-8864-2200
China - Suzhou - 86-186-6233-1526
China - Wuhan - 86-27-5980-5300
China - Xiamen - 86-592-2388138
China - Xian - 86-29-8833-7252
China - Zhuhai - 86-756-3210040
India - Bangalore - 91-80-3090-4444
India - New Delhi - 91-11-4160-8631
India - Pune - 91-20-4121-0141
Japan - Osaka - 81-6-6152-7160
Japan - Tokyo - 81-3-6880-3770
Korea - Daegu - 82-53-744-4301
Korea - Seoul - 82-2-554-7200
Malaysia - Kuala Lumpur - 60-3-7651-7906
Malaysia - Penang - 60-4-227-8870
Philippines - Manila - 63-2-634-9065
Singapore - 65-6334-8870
Taiwan - Hsin Chu - 886-3-577-8366
Taiwan - Kaohsiung - 886-7-213-7830
Taiwan - Taipei - 886-2-2508-8600
Thailand - Bangkok - 66-2-694-1351
Vietnam - Ho Chi Minh - 84-28-5448-2100

05/14/19

Microchip Technology Inc. • 2355 West Chandler Blvd. • Chandler, AZ 85224-6199

www.microchip.com

The Microchip name and logo, the Microchip logo, and MPLAB are registered trademarks of Microchip Technology Incorporated in the U.S.A. and other countries. All other trademarks mentioned herein are property of their respective companies. © 2020, Microchip Technology Incorporated, Printed in the U.S.A. All Rights Reserved. 01/16

DS40001845B

Curiosity High Pin Count 28/40 (HPC) Development Board Quick Start Guide

Overview

The Curiosity HPC Development Board layout and schematic can be found on the Microchip website:

www.microchip.com/curiosityhpc

This board provides flexibility for experimentation through an application header with ground (GND) and supply voltage (VDD) connections. It also includes a set of indication LEDs, push button switches, and a variable potentiometer.

Additionally, it features two mikroBUS™ headers to accommodate a variety of plug-in Click™ Boards that can be used in application development. All connections to the mikroBUS headers, LEDs, switches and potentiometer are labeled with the microcontroller port name for ease of programming. Curiosity HPC is fully compatible with MPLAB® Code Configurator and MPLAB® X IDE v5.20 or later.

Note: Low Voltage Programming (LVP) must be enabled in MPLAB X IDE.

Board Power-Up

Power is supplied by the Micro-USB connector on the left of the board.

Demonstration Program

After applying power to the Curiosity HPC Development Board via the USB connector on the left side of the board, LEDs will automatically turn on. Turn POT1 to change the brightness of the LED D5. Press the push button **S1** to turn on LED D4, and push button **S2** to turn on LED D3. LED D2 will be blinking every 250 milliseconds.

Board Layout

The Curiosity HPC Development Board is shown in Figure 1. A PIC18F47Q10 40-pin microcontroller is populated in the center of the demo board next to the target device label. The Curiosity HPC Development Board accommodates 40- and 28-pin 8-bit microcontrollers. The PIC18F47Q10 is initially connected to the following components:

- Push Button (S1)
- Push Button (S2)
- Potentiometer
- Reset Button
- LEDs (D2 – D5)
- mikroBUS™ Header 1
- mikroBUS™ Header 2

The board is flexible and allows individual experiments. Power and ground (GND) connections are available, as well as isolation by unsoldering of the solder jumpers. The full pin breakout of the microcontroller is provided to expand the flexibility of the Curiosity HPC Development Board.

FIGURE 1: CURIOSITY HPC DEVELOPMENT BOARD LAYOUT VERSION 1

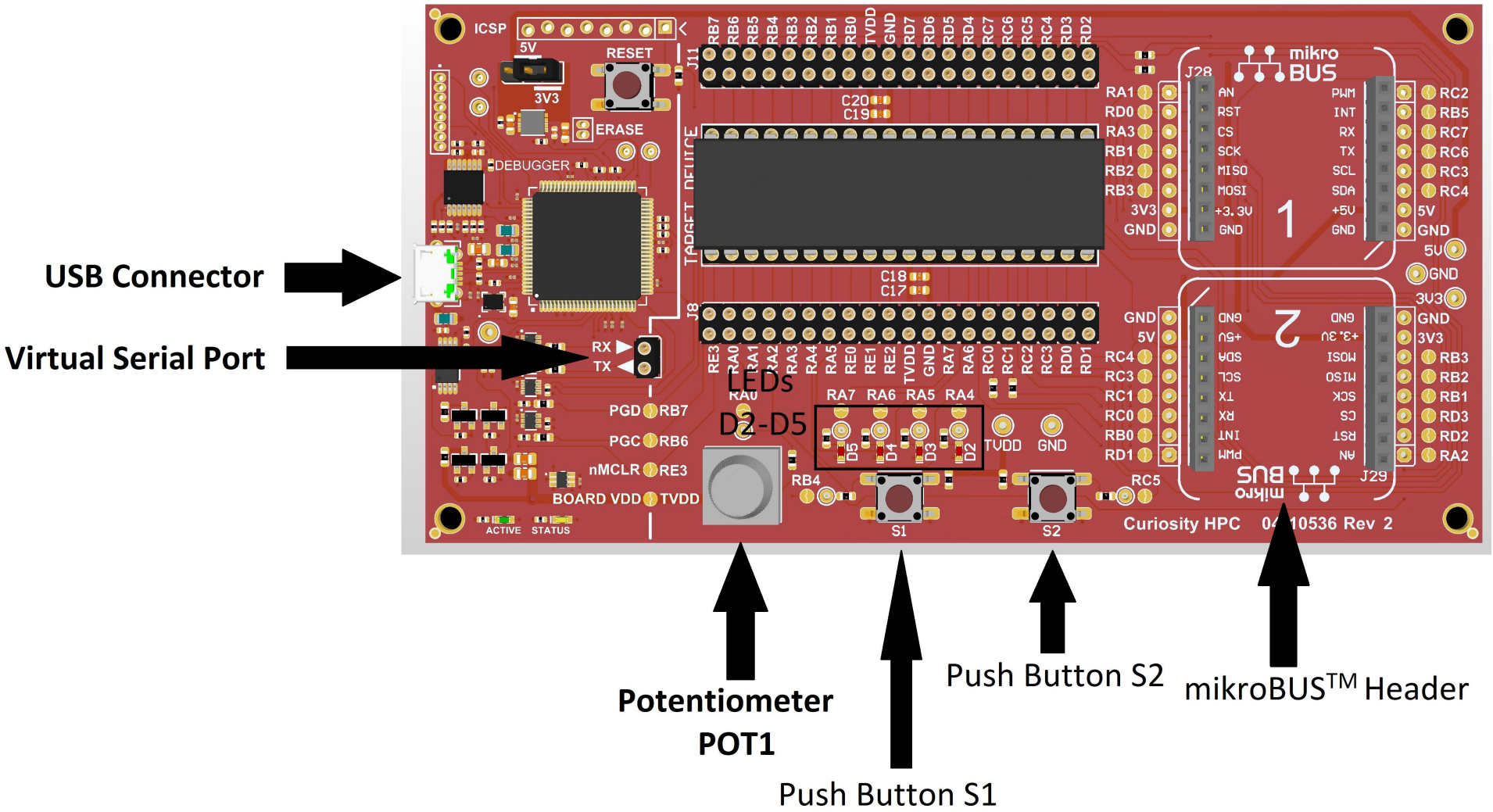

Main System Interconnect

Curiosity HPC

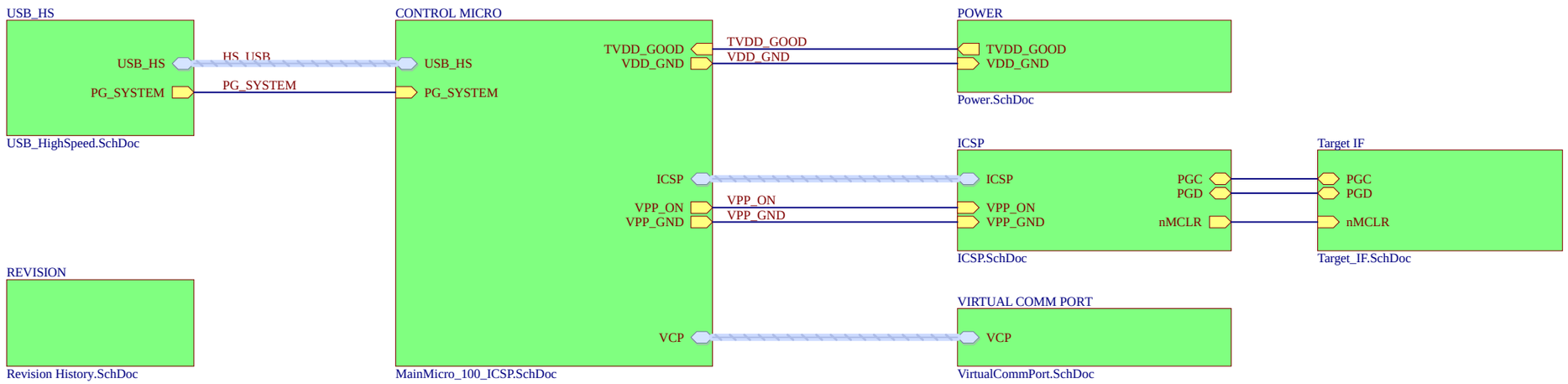

Drawn By: M.Loper/M.Ragsdale			
Engineer: M.Pearce/A.Rodriguez			
PartNumber: DM164136	Project Title: *Curiosity HPC*	Variant: Production	
Sheet Title: PKoB4 Main Block			Designed with Altium.com
Size B	Sch #:03-10536	Date: 10/29/2020 7:50:15 PM	
	Revision:2	Sheet 1 of 9	
File: 03-10536.SchDoc			

USB High Speed

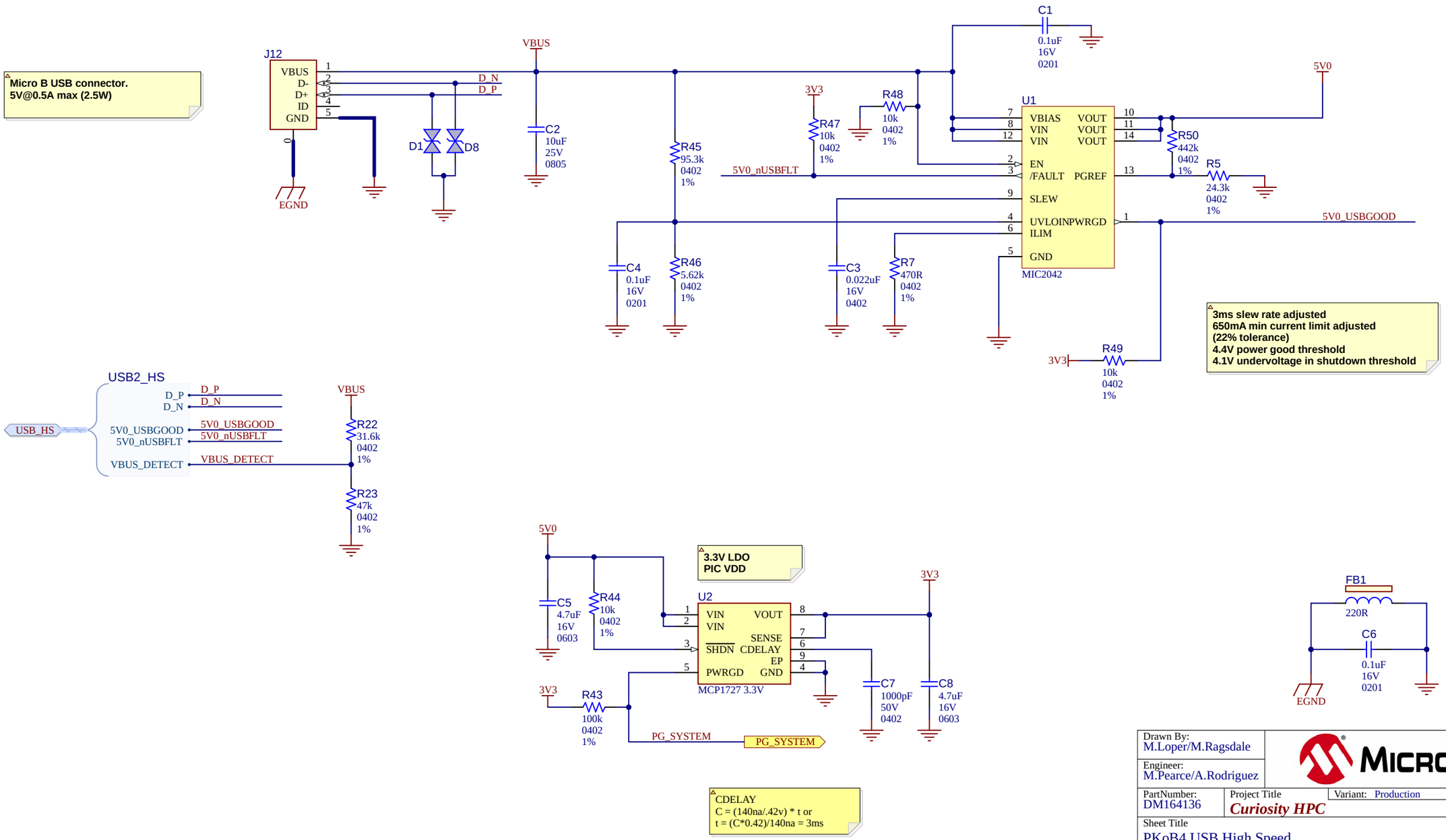

Drawn By: M.Loper/M.Ragsdale		
Engineer: M.Pearce/A.Rodriguez		
PartNumber: DM164136	Project Title: *Curiosity HPC*	Variant: Production
Sheet Title: PKoB4 USB High Speed		Designed with Altium.com
Size: B	Sch #:03-10536 / Revision:2	Date: 10/29/2020 7:50:15 PM / Sheet 2 of 9
File: USB_HighSpeed.SchDoc		

Main Micro

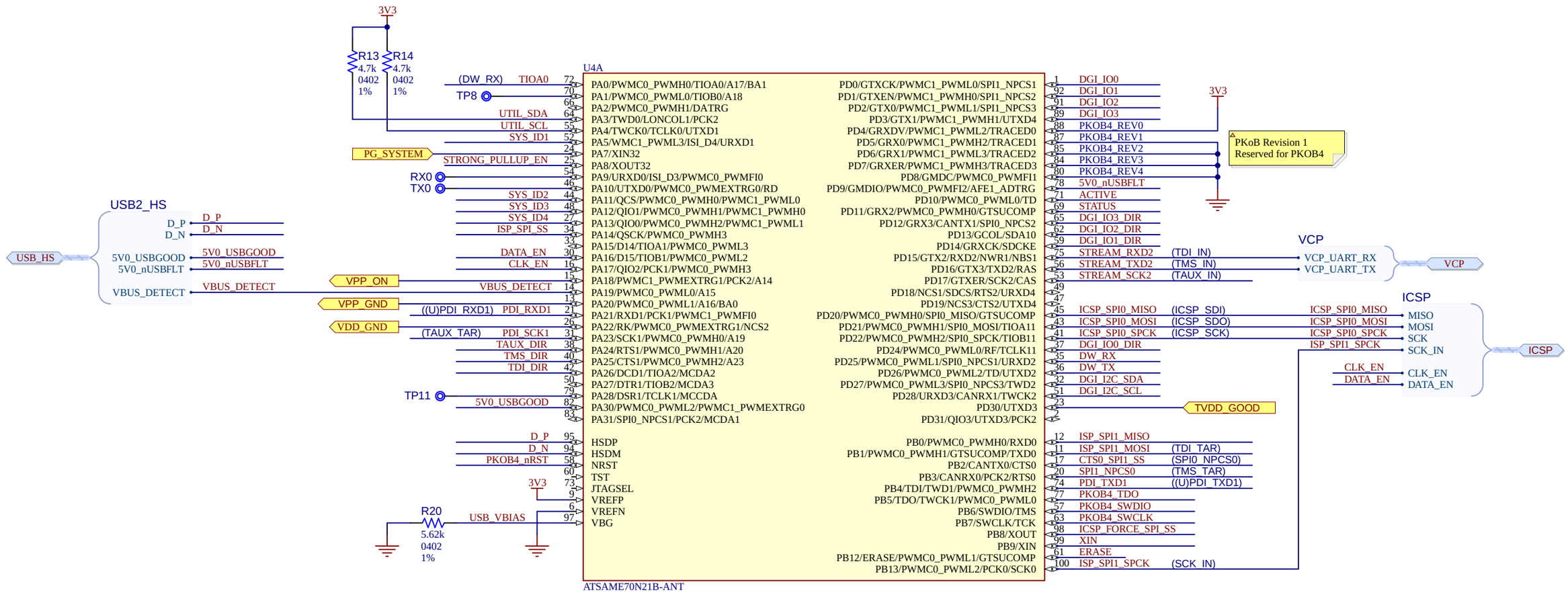

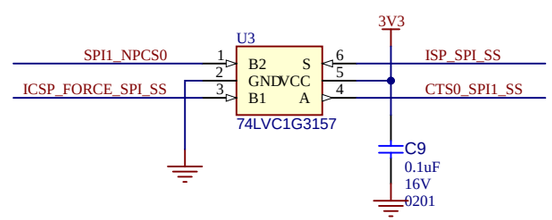

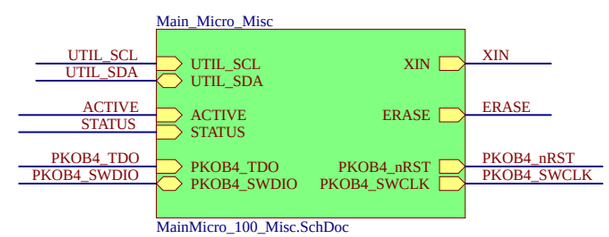

Drawn By: M.Loper/M.Ragsdale		MICROCHIP
Engineer: M.Pearce/A.Rodriguez		
PartNumber: DM164136	Project Title: *Curiosity HPC*	Variant: Production
Sheet Title: PKoB4 Main Micro		Designed with Altium.com
Size B	Sch #:03-10536	Date: 10/29/2020 7:50:15 PM
	Revision:2	Sheet 3 of 9
File: MainMicro_100_ICSP.SchDoc		

Main Micro Misc.

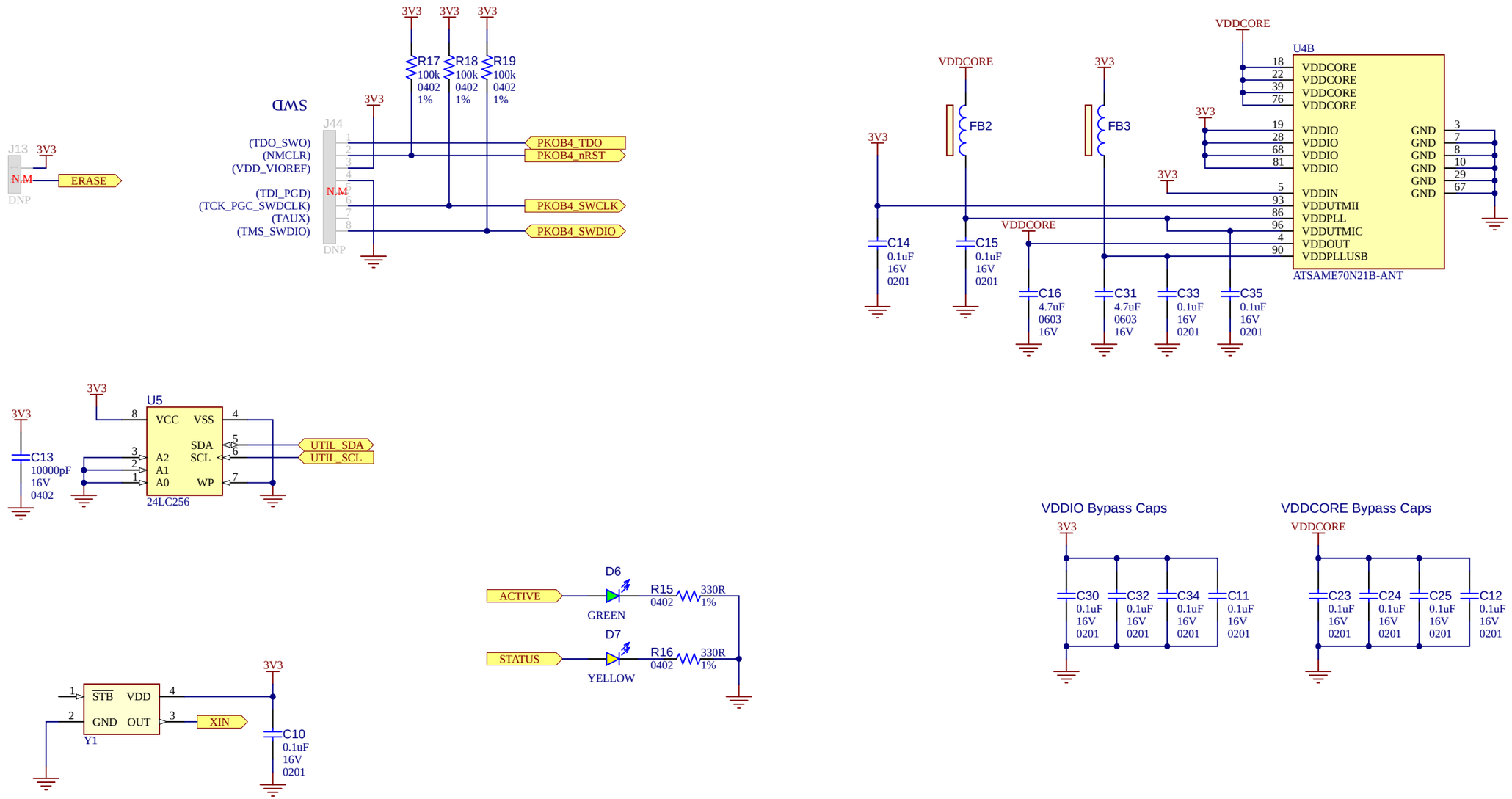

Drawn By: M.Loper/M.Ragsdale		MICROCHIP
Engineer: M.Pearce/A.Rodriguez		
PartNumber: DM164136	Project Title: *Curiosity HPC*	Variant: Production
Sheet Title: PKoB4 Main Micro Misc.		Designed with Altium
Size: B	Sch #:03-10536	Date: 10/29/2020 7:50:15 PM
	Revision:2	Sheet 4 of 9
File: MainMicro_100_Misc.SchDoc		Altium.com

Power

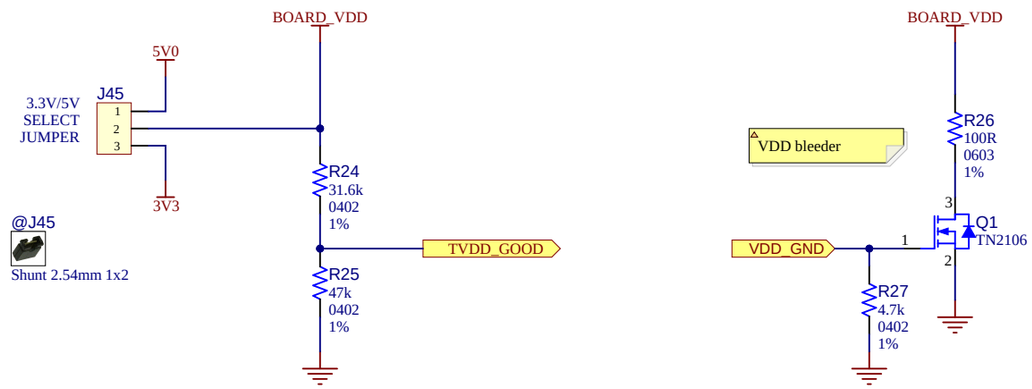

Drawn By: M.Loper/M.Ragsdale			
Engineer: M.Pearce/A.Rodriguez			
PartNumber: DM164136	Project Title: *Curiosity HPC*	Variant: Production	
Sheet Title: Power			Designed with Altium.com
Size B	Sch #:03-10536	Date: 10/29/2020 7:50:15 PM	
	Revision:2	Sheet 5 of 9	
File: Power.SchDoc			

ICSP

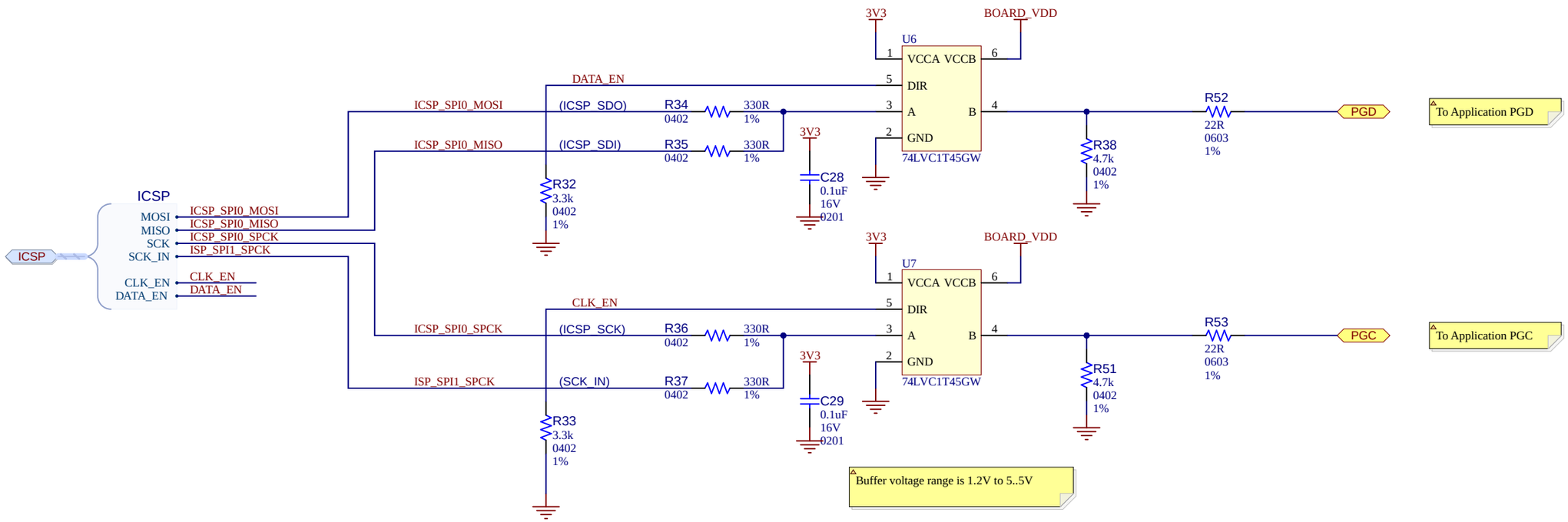

VPP Switch

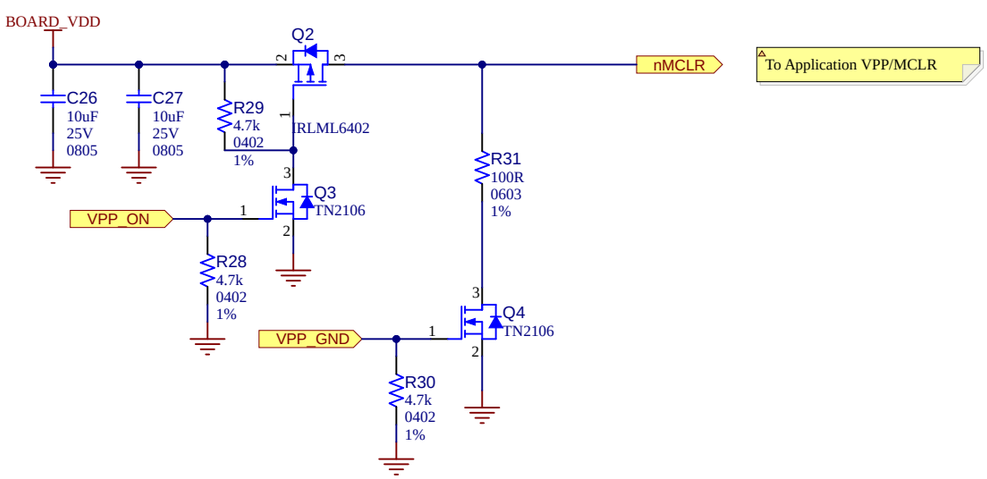

Drawn By: M.Loper/M.Ragsdale			
Engineer: M.Pearce/A.Rodriguez			
PartNumber: DM164136	Project Title: *Curiosity HPC*	Variant: Production	
Sheet Title: ICSP			Designed with Altium
Size: B	Sch #:03-10536	Date: 10/29/2020 7:50:16 PM	Altium.com
	Revision: 2	Sheet 6 of 9	
File: ICSP.SchDoc			

Virtual Comm Port

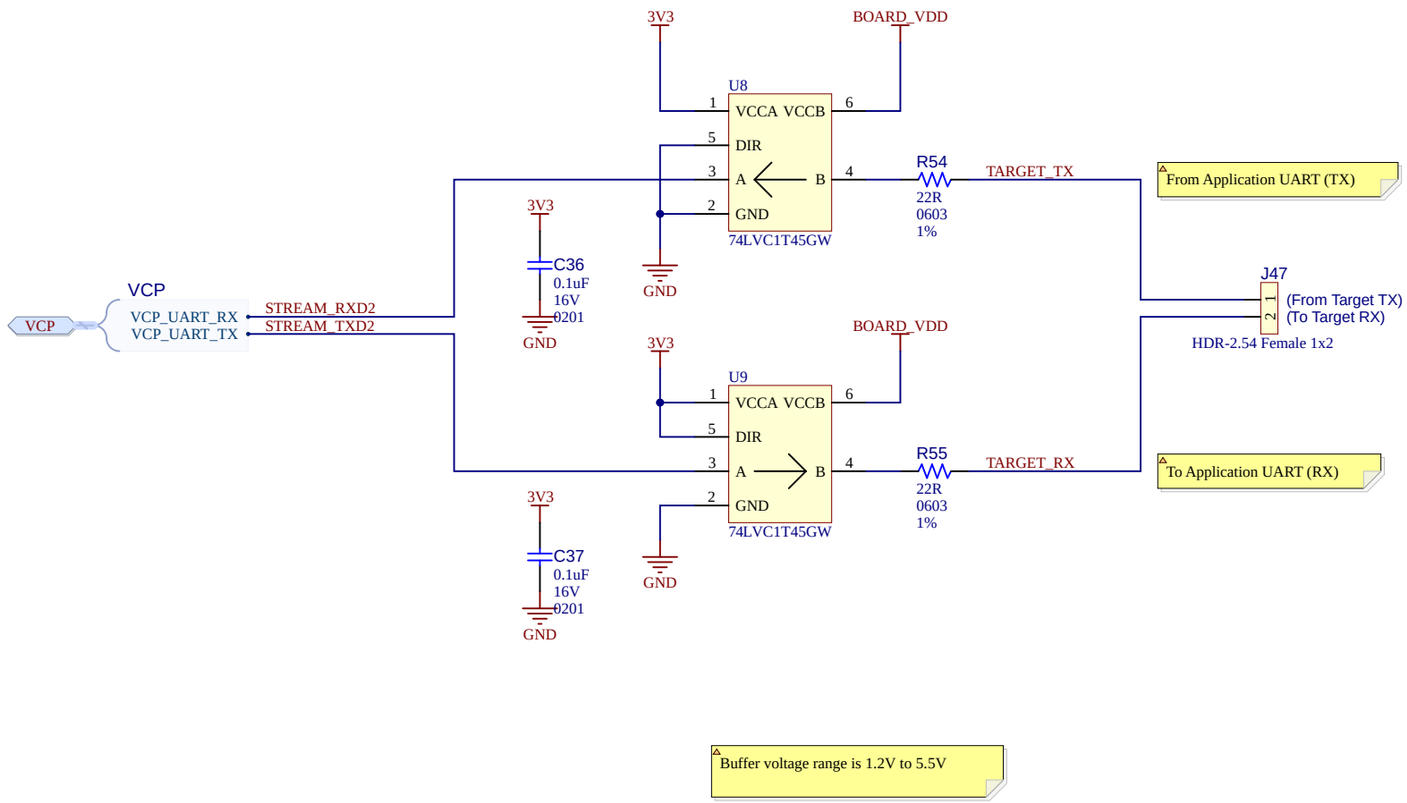

Drawn By: M.Loper/M.Ragsdale		MICROCHIP
Engineer: M.Pearce/A.Rodriguez		
PartNumber: DM164136	Project Title: *Curiosity HPC*	Variant: Production
Sheet Title: Virtual Comm Port		Designed with Altium
Size: B	Sch #:03-10536 / Revision:2	Date: 10/29/2020 7:50:16 PM / Sheet 7 of 9
File: VirtualCommPort.SchDoc		Altium.com

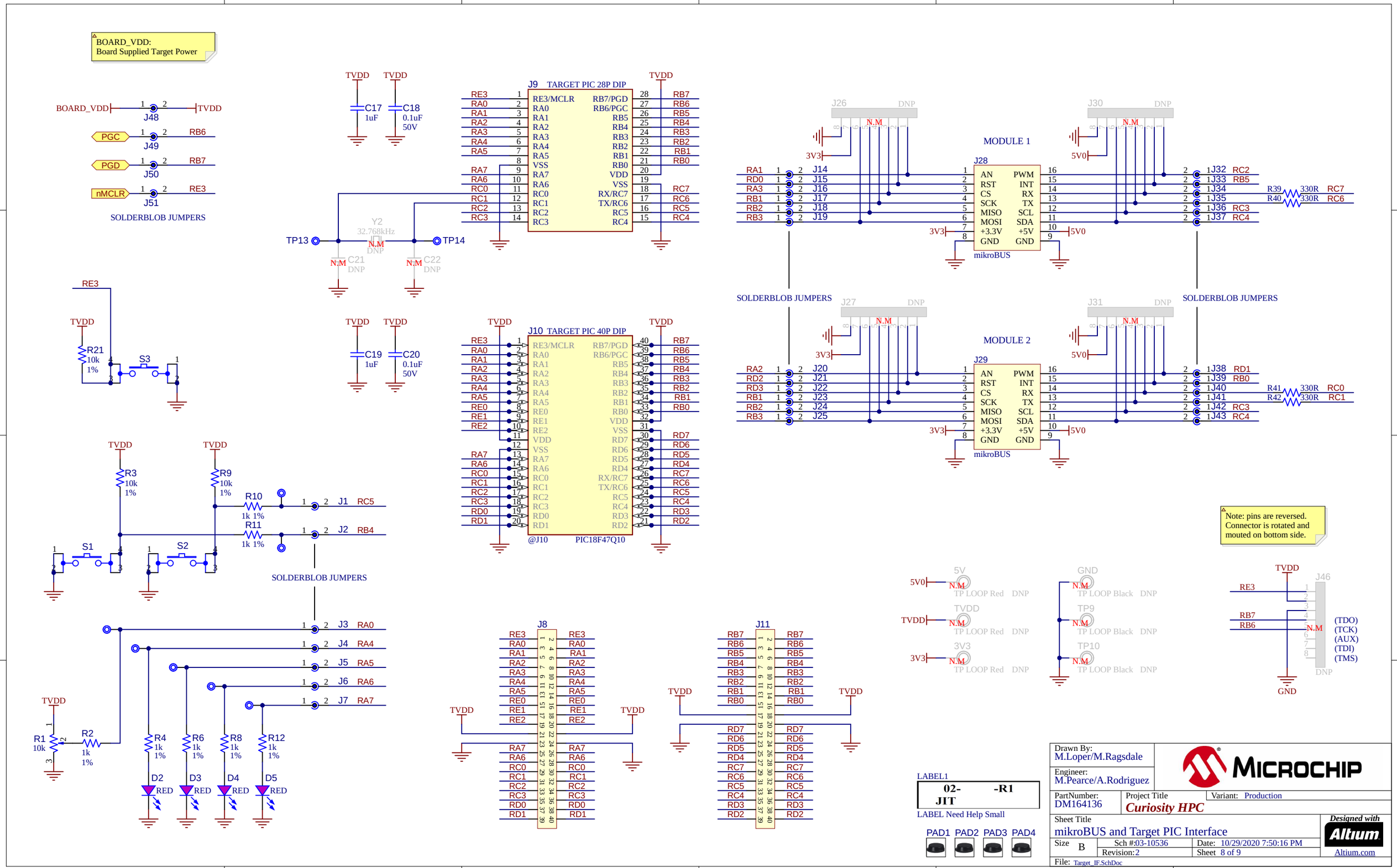
BOARD_VDD:
Board Supplied Target Power
BOARD_VDD
TVDD
J48
PGC
RB6
J49
PGD
RB7
J50
nMCLR
RE3
J51
SOLDERBLOB JUMPERS
C17
1uF
C18
0.1uF
50V
J9 TARGET PIC 28P DIP
RE3/MCLR
RA0
RA1
RA2
RA3
RA4
RA5
VSS
RA7
RA6
RC0
RC1
RC2
RC3
RB7/PGD
RB6/PGC
RB5
RB4
RB3
RB2
RB1
RB0
VDD
VSS
RX/RC7
TX/RC6
RC5
RC4
Y2
32.768kHz
N.M
DNP
TP13
TP14
C21
C22
RE3
R21
10k
1%
S3
C19
1uF
C20
0.1uF
50V
J10 TARGET PIC 40P DIP
RE0
RE1
RE2
RD7
RD6
RD5
RD4
RD3
RD2
RD1
@J10
PIC18F47Q10
R3
10k
1%
R9
10k
1%
R10
1k 1%
R11
1k 1%
S1
S2
J1 RC5
J2 RB4
SOLDERBLOB JUMPERS
J3 RA0
J4 RA4
J5 RA5
J6 RA6
J7 RA7
R1
10k
R2
1k
1%
R4
1k
1%
R6
1k
1%
R8
1k
1%
R12
1k
1%
D2
D3
D4
D5
RED
J26
J30
J28
MODULE 1
3V3
5V0
J14
J15
J16
J17
J18
J19
AN
RST
CS
SCK
MISO
MOSI
+3.3V
GND
PWM
INT
RX
TX
SCL
SDA
+5V
GND
mikroBUS
1J32 RC2
1J33 RB5
1J34
1J35
1J36 RC3
1J37 RC4
R39 330R RC7
R40 330R RC6
J27
J31
J29
MODULE 2
J20
J21
J22
J23
J24
J25
1J38 RD1
1J39 RB0
1J40
1J41
1J42 RC3
1J43 RC4
R41 330R RC0
R42 330R RC1
Note: pins are reversed.
Connector is rotated and
mouted on bottom side.
5V
TP LOOP Red
GND
TP LOOP Black
TP9
TP10
J46
(TDO)
(TCK)
(AUX)
(TDI)
(TMS)
J8
J11
LABEL1
02- -R1
JIT
LABEL Need Help Small
PAD1
PAD2
PAD3
PAD4
Drawn By:
M.Loper/M.Ragsdale
Engineer:
M.Pearce/A.Rodriguez
MICROCHIP
PartNumber:
DM164136
Project Title
Curiosity HPC
Variant: Production
Sheet Title
mikroBUS and Target PIC Interface
Size B
Sch #:03-10536
Date: 10/29/2020 7:50:16 PM
Revision:2
Sheet 8 of 9
File: Target_IF.SchDoc
Designed with
Altium
Altium.com

Revision History

Rev. A: 2016-02-17

Initial Design

Rev. 1: 2016-03-31

Rev. 1.1: 2016-06-23

Rev. 2: 2019-10-25

Updated to use PkoB 4 debugger design.
All components updated to MCL standards.

Drawn By: M.Loper/M.Ragsdale		
Engineer: M.Pearce/A.Rodriguez		
PartNumber: DM164136	Project Title: *Curiosity HPC*	Variant: Production
Sheet Title: Revision History		Designed with Altium.com
Size B	Sch #:03-10536	Date: 10/29/2020 7:50:17 PM
	Revision:2	Sheet 9 of 9
File: Revision History.SchDoc		

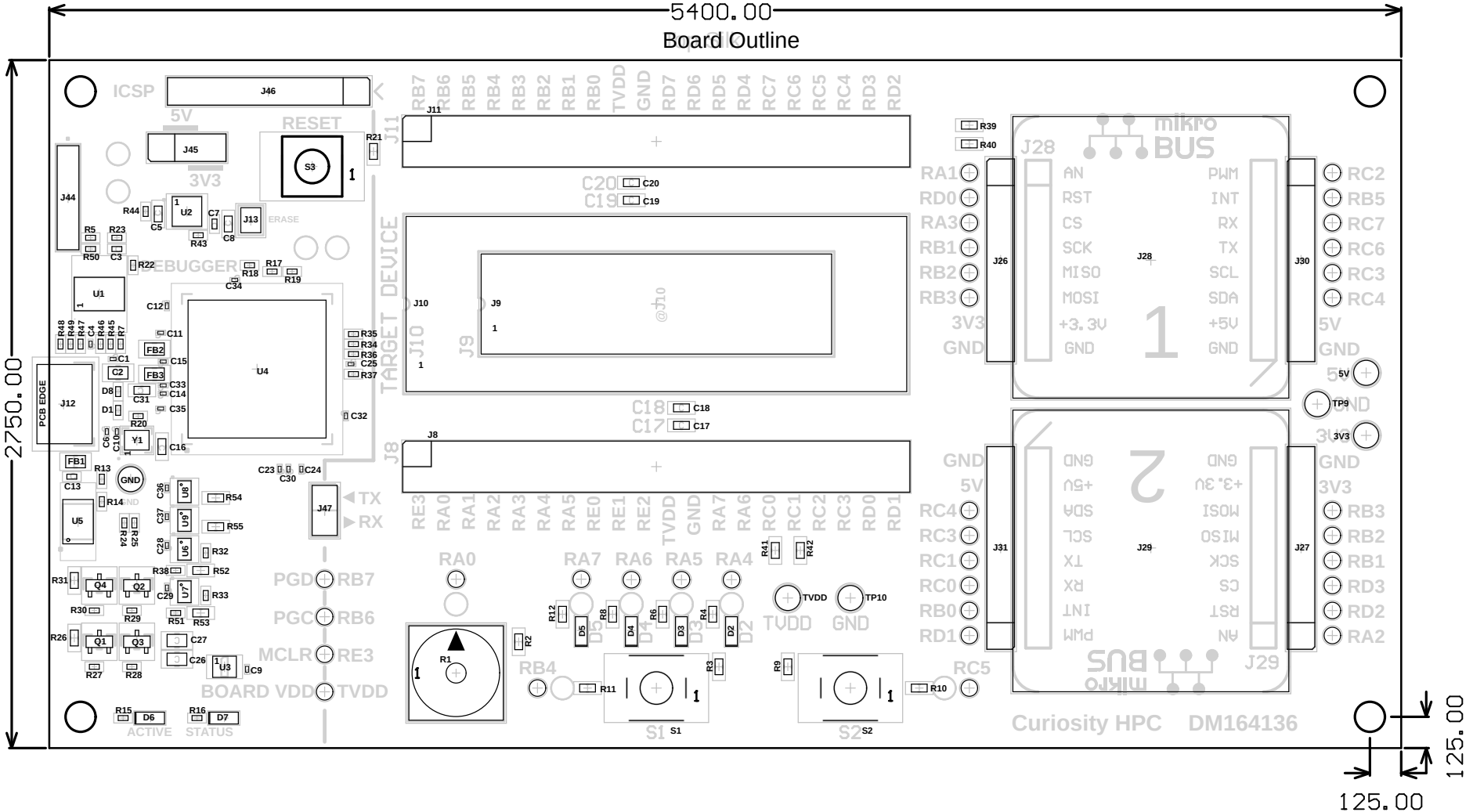
5400.00
Board Outline
2750.00
125.00
125.00
ICSP
J46
5V
J45
3V3
RESET
S3
J44
U2
J13
ERASE
DEBUGGER
U1
U4
PCB EDGE
J12
Y1
GND
U5
J47
TX
RX
PGD
PGC
MCLR
BOARD VDD
TVDD
RB7
RB6
RE3
ACTIVE
STATUS
D6
D7
TARGET DEVICE
J11
J10
J9
J8
RB7 RB6 RB5 RB4 RB3 RB2 RB1 RB0 TVDD GND RD7 RD6 RD5 RD4 RC7 RC6 RC5 RC4 RD3 RD2
RE3 RA0 RA1 RA2 RA3 RA4 RA5 RE0 RE1 RE2 TVDD GND RA7 RA6 RC0 RC1 RC2 RC3 RD0 RD1
RA0
RA7 RA6 RA5 RA4
RB4
RC5
TVDD
GND
TP10
S1
S2
mikro BUS
J28
J26
J30
J31
J29
J27
RA1
RD0
RA3
RB1
RB2
RB3
3V3
GND
RC2
RB5
RC7
RC6
RC3
RC4
5V
GND
TP9
3V3
GND
5V
RC4
RC3
RC1
RC0
RB0
RD1
RB3
RB2
RB1
RD3
RD2
RA2
Curiosity HPC
DM164136

Board Outline

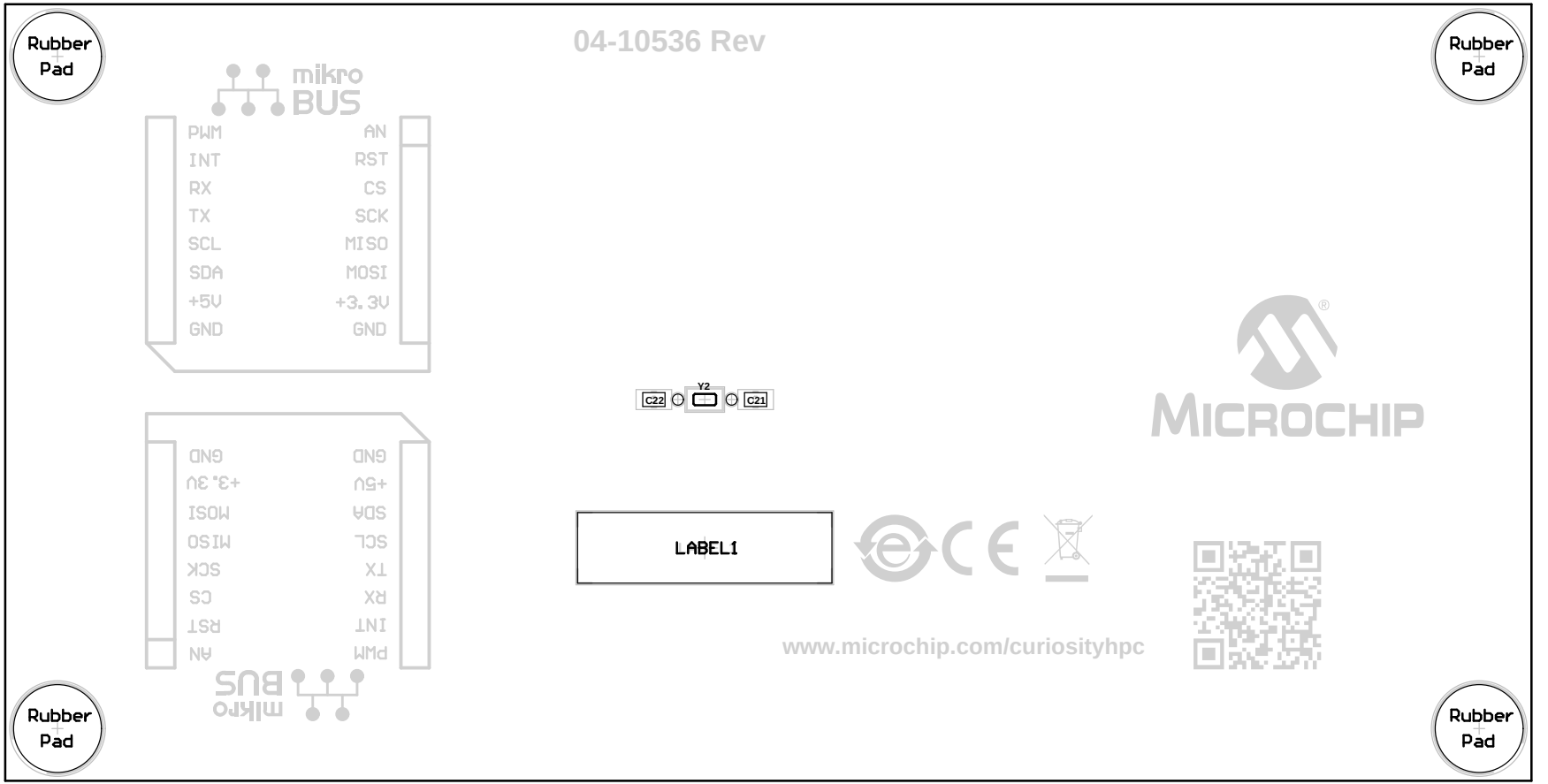

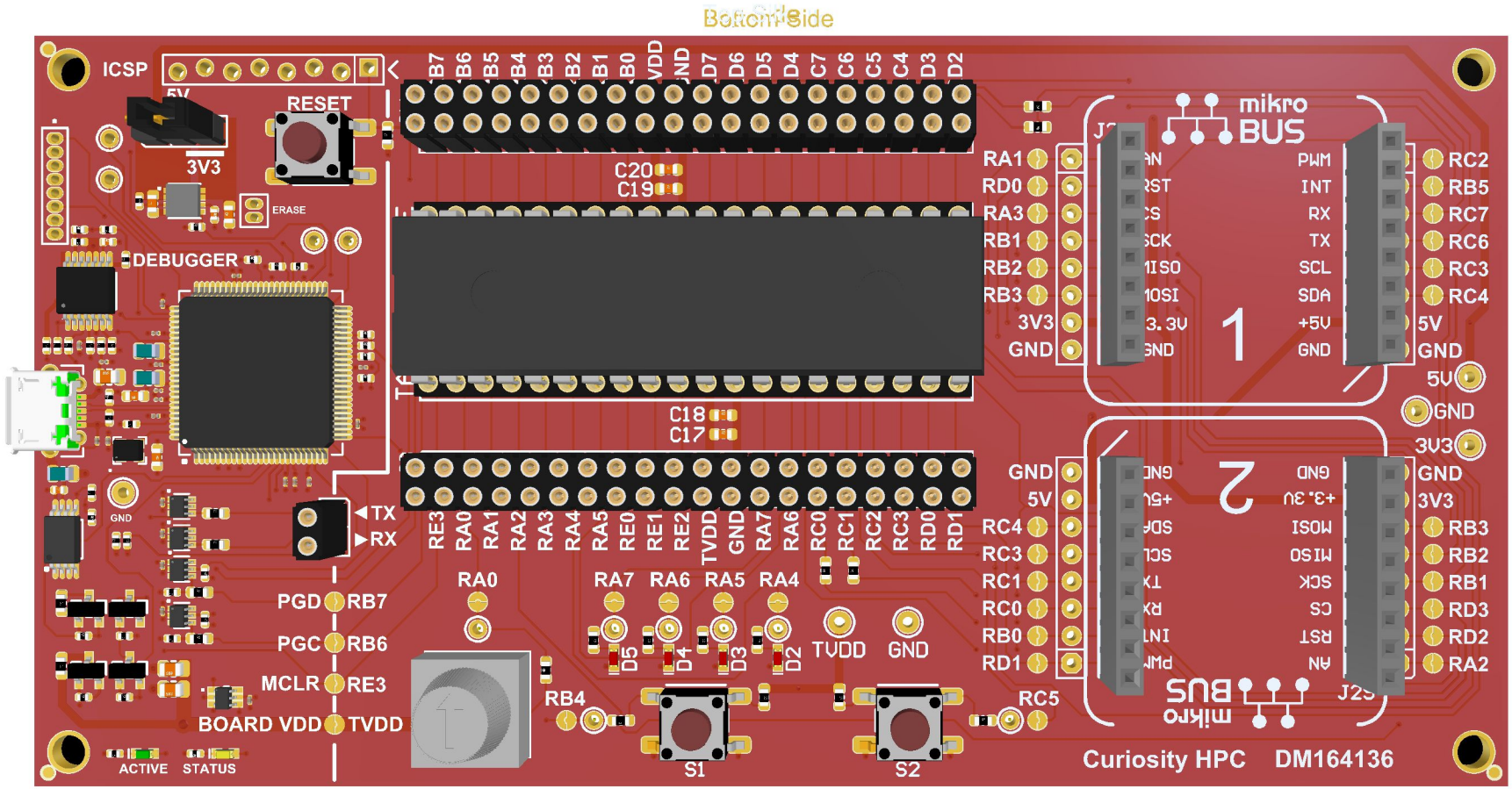
Bottom Side
ICSP
5V
3V3
RESET
ERASE
DEBUGGER
GND
TX
RX
PGD RB7
PGC RB6
MCLR RE3
BOARD VDD TVDD
ACTIVE
STATUS
B7 B6 B5 B4 B3 B2 B1 B0 VDD GND D7 D6 D5 D4 C7 C6 C5 C4 D3 D2
C20
C19
C18
C17
RE3 RA0 RA1 RA2 RA3 RA4 RA5 RE0 RE1 RE2 TVDD GND RA7 RA6 RC0 RC1 RC2 RC3 RD0 RD1
RA0
RA7 RA6 RA5 RA4
D5 D4 D3 D2
TVDD GND
RB4
S1
S2
RC5
mikro BUS
1
2
RA1 RD0 RA3 RB1 RB2 RB3 3V3 GND
GND 5V RC4 RC3 RC1 RC0 RB0 RD1
RC2 RB5 RC7 RC6 RC3 RC4 5V GND
5V GND 3V3 GND 3V3 RB3 RB2 RB1 RD3 RD2 RA2
Curiosity HPC DM164136

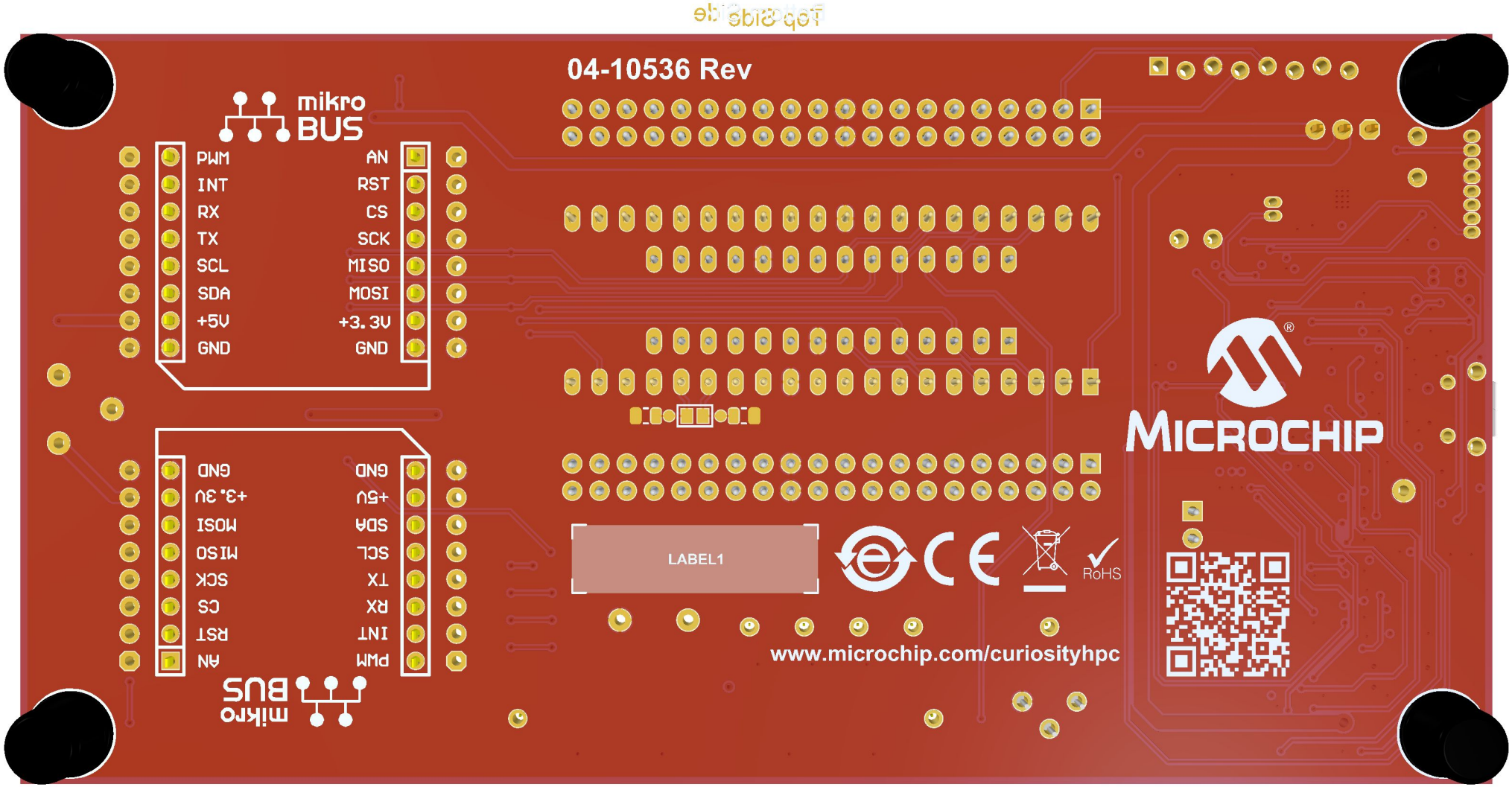
mikro BUS
PWM
INT
RX
TX
SCL
SDA
+5V
GND
AN
RST
CS
SCK
MISO
MOSI
+3.3V
GND
GND
+5V
SDA
SCL
TX
RX
INT
PWM
GND
+3.3V
MOSI
MISO
SCK
CS
RST
AN
mikro BUS
04-10536 Rev
LABEL1
RoHS
MICROCHIP
www.microchip.com/curiosityhpc

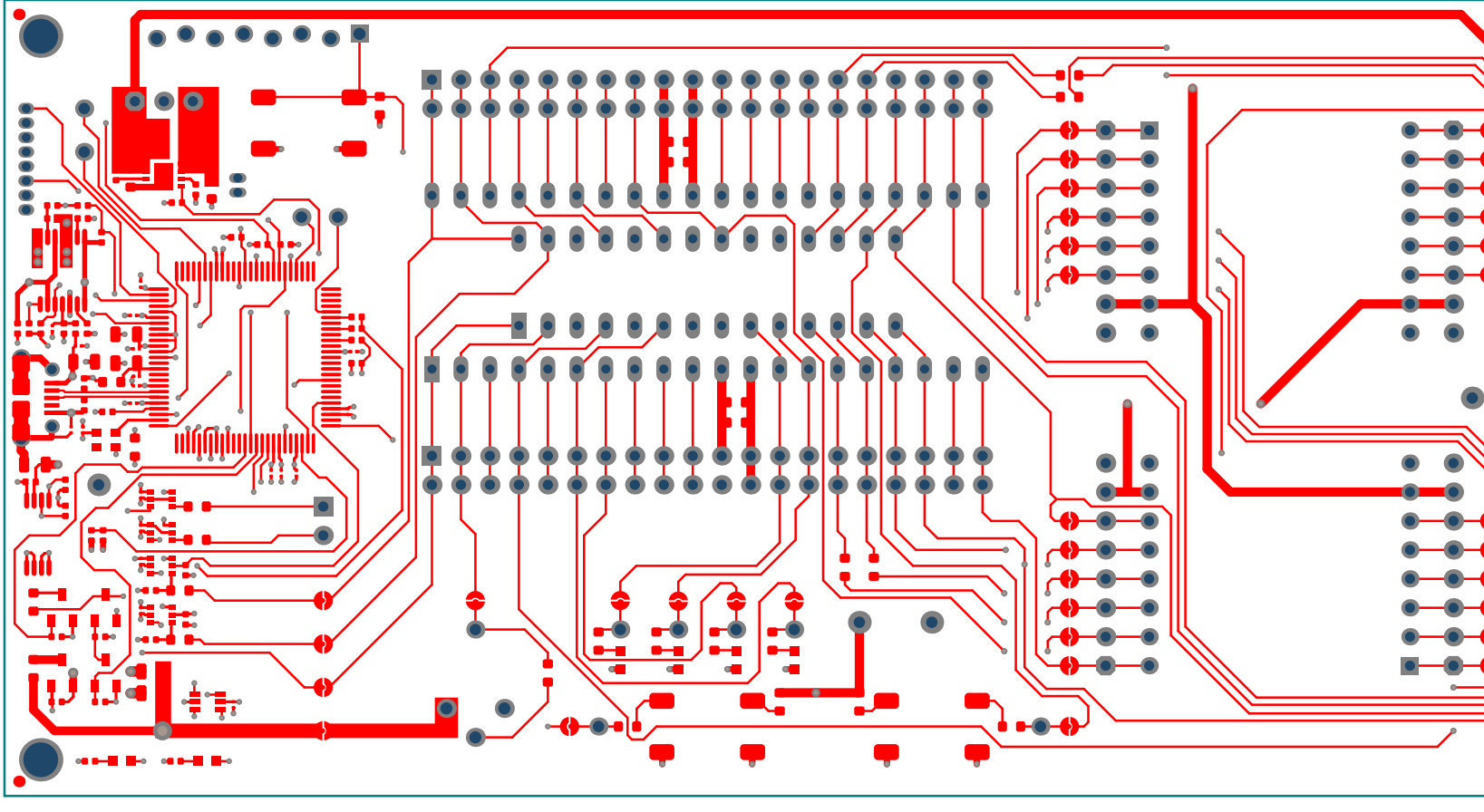

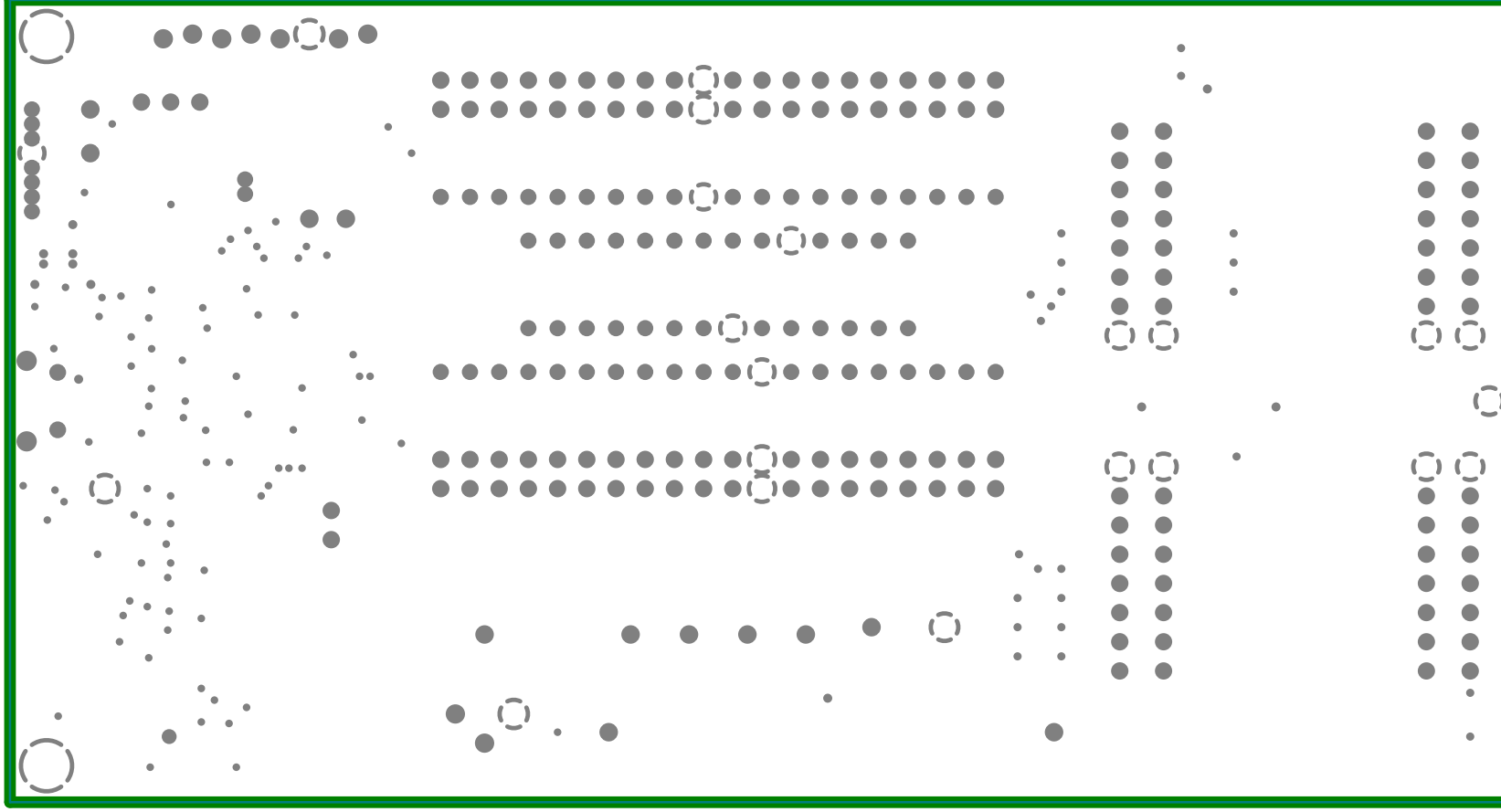

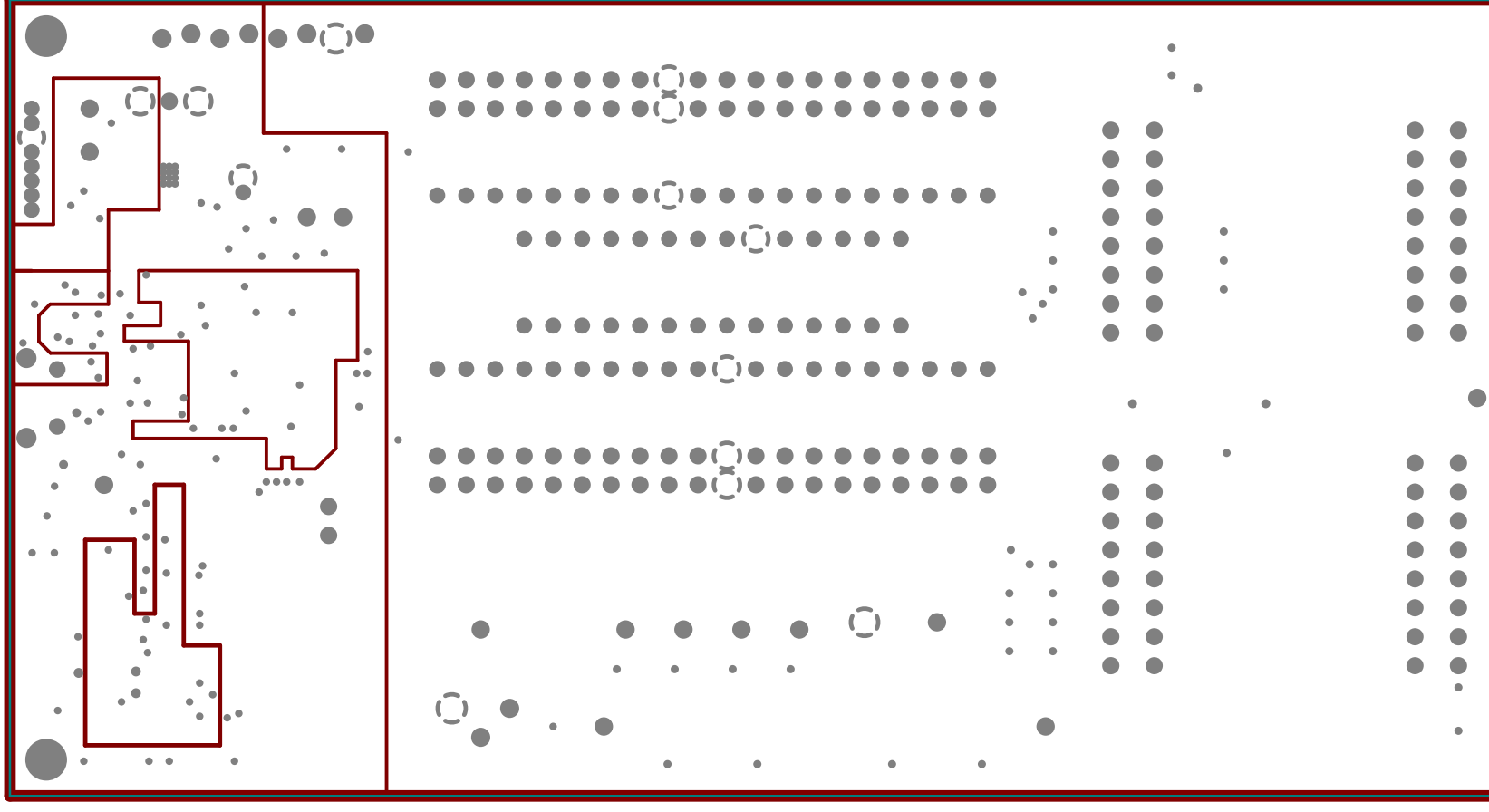

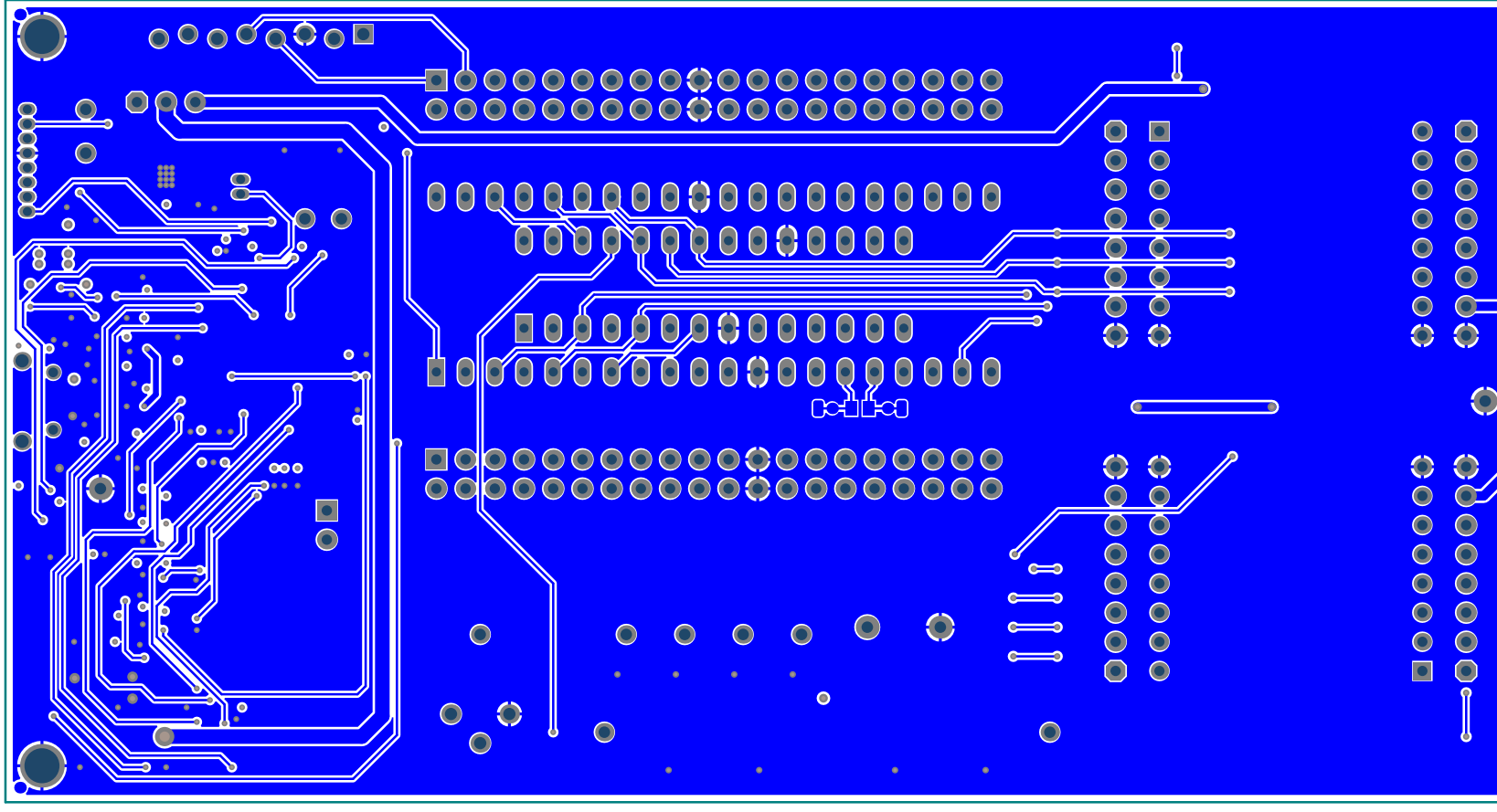

Component list

Bill of Materials Fitted for Variant [Production] of Project [High Pin Count Curiosity.PrjPcb] (No PCB Document Selected)

Source Data From: High Pin Count Curiosity.PrjPcb
Project: High Pin Count Curiosity.PrjPcb
Variant: Production

Report Date: 10/29/2020 7:50 PM
Print Date: 10/29/2020 7:50:27 PM

Fitted	Designator	Quantity	Value	Manufacturer 1	Manufacturer Part Number 1	Description
Fitted	@J10	1	PIC18F47Q10	Microchip Technology	PIC18F47Q10-I/P	Microcontroller
Fitted	@J45	1	Shunt 2.54mm 1x2	Wurth Electronics Inc.	60900213421	
Fitted	C1, C4, C6, C9, C10, C11, C12, C14, C15, C23, C24, C25, C28, C29, C30, C32, C33, C34, C35, C36, C37	21	0.1uF	Murata Electronics North America	GRM033R61C104KE84D	Capacitor
Fitted	C2, C26, C27	3	10uF	TDK Corporation	C2012X5R1E106K125AB	Capacitor
Fitted	C3	1	0.022uF	Samsung Electro-Mechanics America, Inc	CL05B223KO5NNNC	Capacitor
Fitted	C5, C8, C16, C31	4	4.7uF	TDK Corporation	C1608X5R1C475K080AC	Capacitor
Fitted	C7	1	1000pF	Murata	GRM155R71H102KA01D	Capacitor
Fitted	C13	1	10000pF	KEMET	C0402C103K4RACTU	Capacitor
Fitted	C17, C19	2	1uF	Taiyo Yuden	LMK107B7105KA-T	Capacitor
Fitted	C18, C20	2	0.1uF	TDK	C1608X7R1H104M	Capacitor
Fitted	D1, D8	2	PGB101	Littlefuse	PGB1010402KR	
Fitted	D2, D3, D4, D5	4	RED	Kingbright	APT1608EC	LED
Fitted	D6	1	GREEN	Lite-On Inc	LTST-C191KGKT	LED
Fitted	D7	1	YELLOW	Lite-On	LTST-C190YKT	LED
Fitted	FB1	1	220R	Murata Electronics North America	BLM21PG221SN1D	FERRITE 180R 1.5A SMD 0603
Fitted	FB2, FB3	2	600R	TDK Corporation	MPZ2012S601AT000	FERRITE 180R 1.5A SMD 0603
Fitted	J8, J11	2	HDR-2.54 Female 2x20	Mill-Max	803-43-040-10-001000	
Fitted	J9	1	110-91-328-41-001	Mill-Max	110-43-328-41-001000	Connector
Fitted	J10	1	110-87-640-41-001151	Preci-Dip	110-87-640-41-001151	Connector
Fitted	J12	1	USB2.0 MICRO-B FEMALE	FCI	10118194-0001LF	
Fitted	J28, J29	2	mikroBUS	Sullins Connector Solutions	PPTC081LFBN-RC	
Fitted	J45	1	HDR-2.54 Male 1x3	FCI	68000-103HLF	
Fitted	J47	1	HDR-2.54 Female 1x2	Mill-Max	803-43-002-10-001000	
Fitted	LABEL1	1	LABEL Need Help Small			
Fitted	PAD1, PAD2, PAD3, PAD4	4	Rubber Pad Cyl D7.9H5.3	3M	SJ61A11	
Fitted	Q1, Q3, Q4	3	TN2106	Microchip Technology	TN2106K1-G	Transistor MOS
Fitted	Q2	1	IRLML6402	International Rectifier	IRLML6402TRPBF	Transistor MOS
Fitted	R1	1	10k	TT Electronics/BI TT Electronics/BI	72PTR10KLF	Resistor Var
Fitted	R2, R4, R6, R8, R10, R11, R12	7	1k	Panasonic	ERJ-3EKF1001V	Resistor
Fitted	R3, R9, R21	3	10k	Panasonic	ERJ-3EKF1002V	Resistor
Fitted	R5	1	24.3k	Samsung	RC1005F2432CS	Resistor
Fitted	R7	1	470R	Yageo	RC0402FR-07470RL	Resistor
Fitted	R13, R14, R27, R28, R29, R30, R38, R51	8	4.7k	Yageo	RC0402FR-074K7L	Resistor
Fitted	R15, R16, R34, R35, R36, R37	6	330R	Yageo	RC0402FR-07330RL	Resistor
Fitted	R17, R18, R19, R43	4	100k	Panasonic	ERJ-2RKF1003X	Resistor
Fitted	R20, R46	2	5.62k	Vishay Dale	CRCW04025K62FKED	Resistor
Fitted	R22, R24	2	31.6k	Panasonic	ERJ-2RKF3162X	Resistor
Fitted	R23, R25	2	47k	Panasonic - ECG	ERJ-2RKF4702X	Resistor
Fitted	R26, R31	2	100R	ROHM	MCR03EZPFX1000	Resistor
Fitted	R32, R33	2	3.3k	Panasonic - ECG	ERJ-2RKF3301X	Resistor
Fitted	R39, R40, R41, R42	4	330R	Panasonic	ERJ-3EKF3300V	Resistor
Fitted	R44, R47, R48, R49	4	10k	Panasonic	ERJ-2RKF1002X	Resistor
Fitted	R45	1	95.3k	Rohm Semiconductor	MCR01MRTF9532	Resistor
Fitted	R50	1	442k	Samsung Electro-Mechanics America, Inc	RC1005F4423CS	Resistor
Fitted	R52, R53, R54, R55	4	22R	Yageo	RC0603FR-0722RL	Resistor
Fitted	S1, S2, S3	3	PTS645SM43SMTR92 LFS	C&K Components	PTS645SM43SMTR92 LFS	Switch
Fitted	U1	1	MIC2042	Microchip Technology	MIC2042-1YTS	IC SMT, MIC2042, DISTRIBUTION SW SGL 14-TSSOP
Fitted	U2	1	MCP1727 3.3V	Microchip Technology	MCP1727-3302E/MF	LDO
Fitted	U3	1	74LVC1G3157	Texas Instruments	SN74LVC1G3157DCKR	
Fitted	U4	1	ATSAME70N21B-ANT	Microchip Technology	ATSAME70N21B-ANT	
Fitted	U5	1	24LC256	Microchip Technology	24LC256T-E/ST	EEPROM I2C
Fitted	U6, U7, U8, U9	4	74LVC1T45GW	NXP USA Inc.	74LVC1T45GW,125	
Fitted	Y1	1	12.00 MHz	Microchip Technology Inc	DSC6011JI1A-012.0000	
Not Fitted	3V3, 5V, TVDD	0	TP LOOP Red	Keystone	5000	Test Point
Not Fitted	C21, C22	0	22pF	Johanson Dielectrics	500R15N220JV4T	Capacitor
Not Fitted	GND, TP9, TP10	0	TP LOOP Black	Keystone	5001	Test Point
Not Fitted	J13	0	HDR-1.27 Male 1x2	Digikey	952-3598-ND	
Not Fitted	J26, J27, J30, J31	0	HDR-2.54 Male 1x8	FCI	68001-108HLF	CON HDR-2.54 Female 1x8 Gold TH
Not Fitted	J44	0	HDR-1.27 Female 1x8	Greenconn	FSEA120-0802A002B1AB	CON HDR-2.54 Female 1x8 Gold TH
Not Fitted	J46	0	HDR-2.54 Male 1X8 STAGGERED			CON HDR-2.54 Female 1x8 Gold TH
Not Fitted	Y2	0	32.768kHz	NDK	NX2012SA-32.768K-STD-MUB-1	Crystal
		134				

Approved

Notes