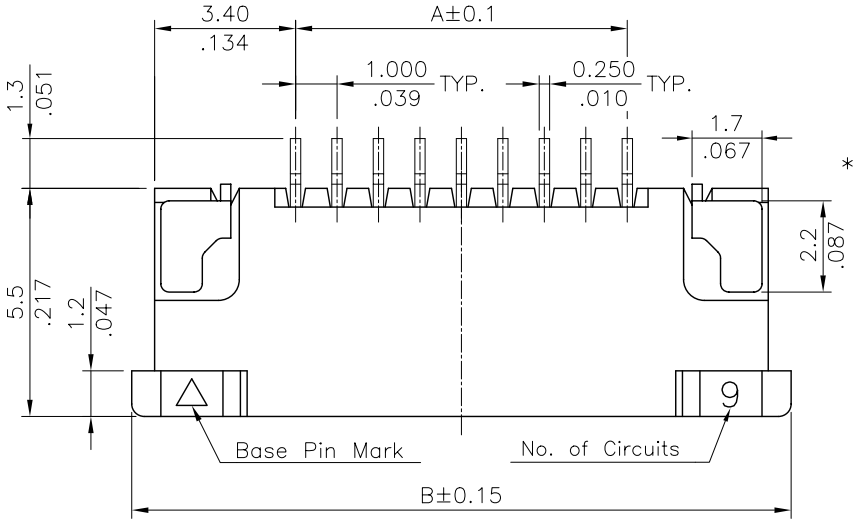

A = 1.00 * No. of Spaces
B = A + 8.0
C = A + 2.1
* Available in 4 through 32 circuits

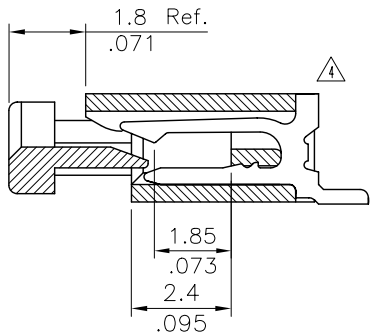

Material :
* Body : High Temperature plastic UL94V-0
* Slider : High Temperature plastic UL94V-0
Color Brown
* Contact : Copper Alloy
* Fixed tab : Copper Alloy with Tin plated

Ordering Code

CF07	**	*	U	0	*	0
①	②	③	④	⑤	⑥	⑦

① Series No.
② No. of Circuits
4 ③ Plating code:
1= Tin plated over Nickel
2= Gold flash plated over Nickel
④ Contact style: U= Upside Contact
⑤ Color: 0= Nature
⑥ Packing options: R= Tape & Reel
T= Tube Packing
⑦ Other options: 0= Standard

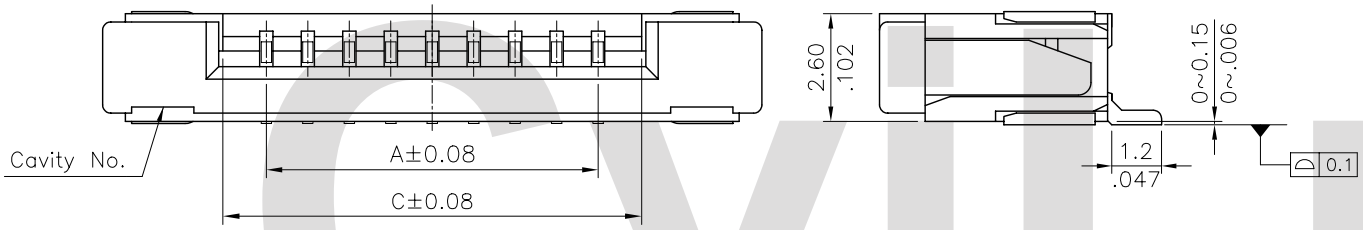

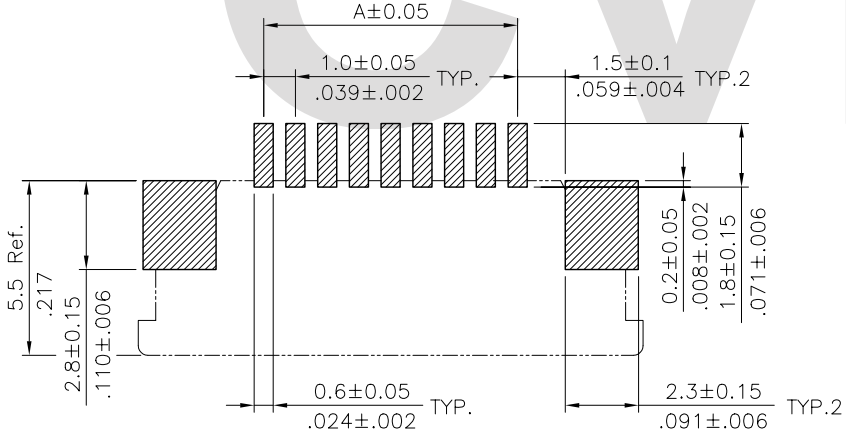

Sold Pad Pattern

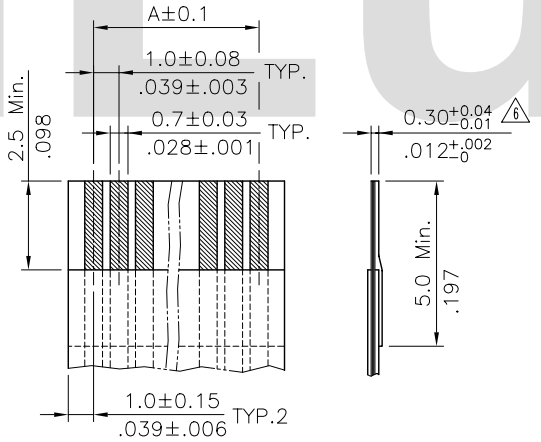

Accommodated FFC

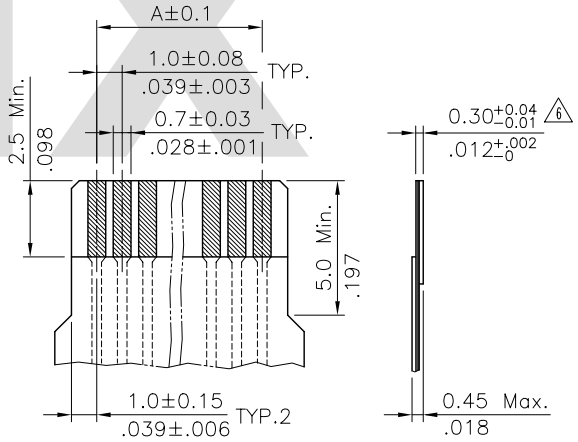

Accommodated FPC

RoHS Compliant

SYM	NAME	DATE	REVISIONS
8	Sun	9/10-08'	ECR08047-2/ECN08398
7	Sun	5/09-08'	ECN08211
6	Sandy	9/17-07'	ECN07381/ECR07065-1
5	Sandy	4/22-07'	ECN07153

CVILUX.XORP 2008.09.16 ISSUED

		DATE
DRAWN BY:	Sun	9/11-08'
ENGINEER:	Eisley	9/11-08'
CHECKED BY:	Alex	9/11-08'
APPROVED BY:	Alex	9/11-08'

UNIT: mm / inch

TOLERANCE UNLESS OTHERWISE SPECIFIED

.X ± 0.15/.006	X.° ± 1°
.XX ± 0.10/.004	.X° ±
.XXX ± 0.05/.002	.XX° ±

TITLE: 1.00mm(.039") ZIF FPC/FFC UPSIDE CONTACT SURFACE MOUNT CONNECTOR

MATERIAL:

FINISH:

瀚荃股份有限公司
CviLux Corporation

DRAWING NO.	CF0702S0	PART NO.	CF07***U0*0
SCALE	5 / 1	SHEET	1 OF 2

cvilux

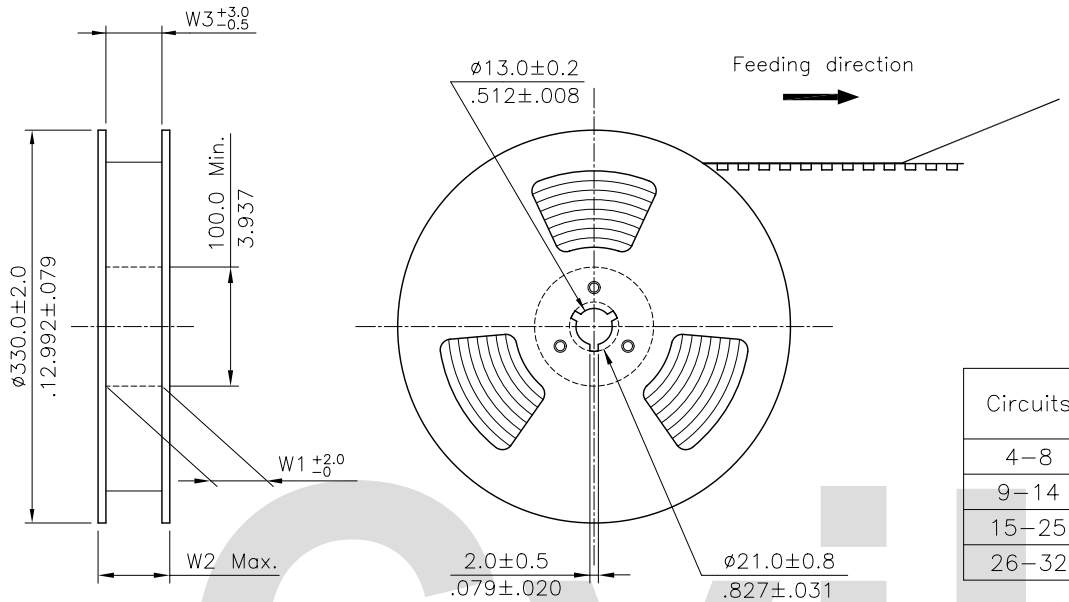

NOTE :

1. 10 sproket hole pitch cumulative tolerance±0.20
2. Carrier camber is within 1 mm in 100 mm .
3. Material : Transparent Conductive Polystyrene Alloy (UP−5000)100% recyclable.
4. All dimensions meet EIA−481−3 requirements.
5. Thickness : 0.33±0.03mm.
6. Packing length per 22" reel : 75.0 Meters.
7. Component load per 13" reel : 2000 pcs.

Circuits	Dimension				
	E	F	W1	W2	W3
4−8	24.0(.945)	−	24.5(.965)	30.5(1.201)	24.5(.965)
9−14	32.0(1.260)	28.40(1.118)	32.5(1.280)	38.5(1.516)	32.5(1.280)
15−25	44.0(1.732)	40.40(1.596)	44.5(1.752)	50.5(1.988)	44.5(1.752)
26−32	56.0(2.205)	52.40(2.062)	56.5(2.224)	62.5(2.460)	56.5(2.224)

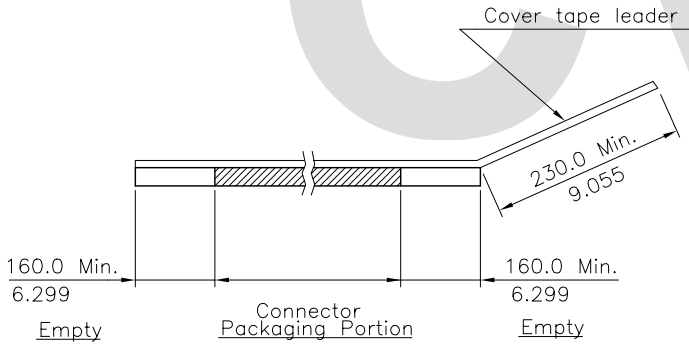

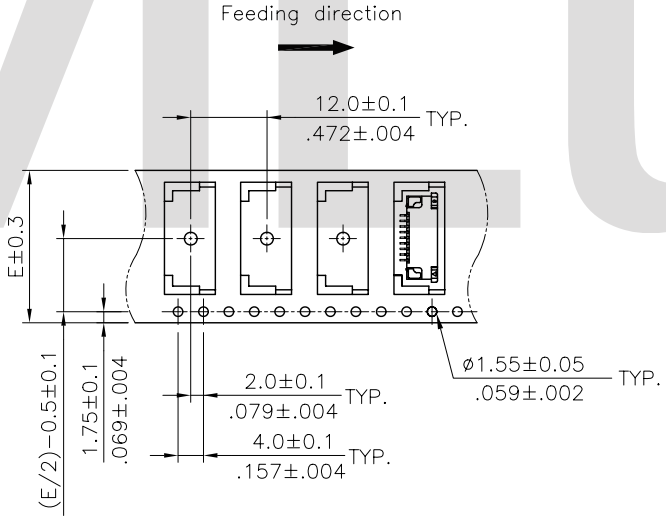

WIDTH : 24 mm Carrier

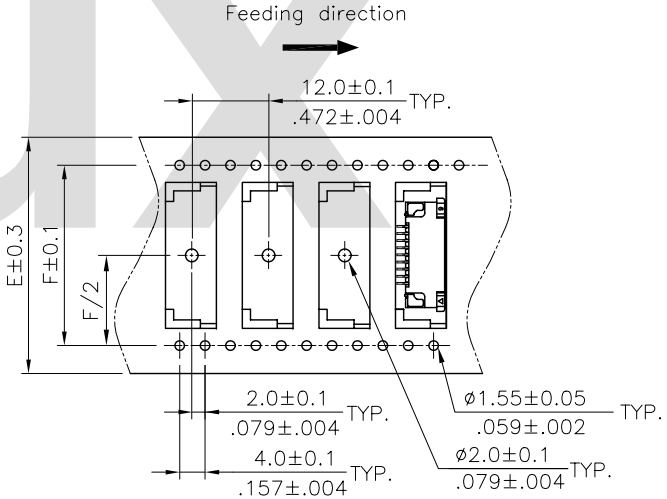

WIDTH : 32,44,56 mm Carrier

RoHS Compliant

SYM	NAME	DATE	REVISIONS
8	Sun	9/10−08'	ECR08047−2/ECN08398
7	Sun	5/09−08'	ECN08211
6	Sandy	9/17−07'	ECN07381/ECR07065−1
5	Sandy	4/22−07'	ECN07153

CVILUX.XORP 2008.09.16 ISSUED

		DATE
DRAWN BY:	Sun	9/11−08'
ENGINEER:	Eisley	9/11−08'
CHECKED BY:	Alex	9/11−08'
APPROVED BY:	Alex	9/11−08'

UNIT: mm / inch

TOLERANCE UNLESS OTHERWISE SPECIFIED

.X ±	X.° ± 1°
.XX ±	.X° ±
.XXX ±	.XX° ±

TITLE: 1.00mm(.039") ZIF FPC/FFC UPSIDE CONTACT SURFACE MOUNT CONNECTOR

MATERIAL:

FINISH:

瀚荃股份有限公司
CviLux Corporation

DRAWING NO.	CF0702SO	PART NO.	CF07***U0*0
SCALE		SHEET 2 OF 2	

CviLux