Chip Ferrite Bead Array
BLA2A□□□□□SN4□ Reference Specification

1. Scope

This reference specification is applied to Chip Ferrite Bead Array BLA2A Series used for electronic machinery.

2. Part Numbering

(ex.)	BL	A	2A	AG	121	S	N	4	D
	(1)	(2)	(3)	(4)	(5)	(6)	(7)	(8)	(9)

(1) Product ID (2) Type (3) Dimension (L×W)
(4) Characteristics (5) Typical Impedance at 100MHz (6) Performance
(7) Category (8) Numbers of Circuit (9) Packaging (D : Taping / B : Bulk)

3. Rating

Customer Part Number	MURATA Part Number	Impedance (Ω) at 100MHz, (Under Standard Testing Condition)	Rated Current (mA)	DC Resistance (Ω max.)		Insulation Resistance between Elements	Remark
				Initial Values	Values After Testing		
	BLA2AAG121SN4D	120 ± 25 %	100	0.5	0.6	100MΩ min.	For general use
	BLA2AAG121SN4B						
	BLA2AAG221SN4D	220 ± 25 %	50	0.7	0.8		
	BLA2AAG221SN4B						
	BLA2AAG601SN4D	600 ± 25 %		1.1	1.2		
	BLA2AAG601SN4B						
	BLA2AAG102SN4D	1000 ± 25 %		1.3	1.4		
	BLA2AAG102SN4B						
	BLA2ABB100SN4D	10 ± 25 %	200	0.1	0.2		For high speed signal Line
	BLA2ABB100SN4B						
	BLA2ABB220SN4D	22 ± 25 %		0.2	0.3		
	BLA2ABB220SN4B						
	BLA2ABB470SN4D	47 ± 25 %		0.35	0.45		
	BLA2ABB470SN4B						
	BLA2ABB121SN4D	120 ± 25 %	50	0.6	0.7		
	BLA2ABB121SN4B						
	BLA2ABB221SN4D	220 ± 25 %		0.9	1.0		
	BLA2ABB221SN4B						
	BLA2ABD750SN4D	75 ± 25 %	200	0.20	0.30		
	BLA2ABD750SN4B						
	BLA2ABD121SN4D	120 ± 25 %		0.35	0.45		
	BLA2ABD121SN4B						
	BLA2ABD221SN4D	220 ± 25 %	100	0.40	0.50		
	BLA2ABD221SN4B						
	BLA2ABD471SN4D	470 ± 25 %		0.65	0.75		
	BLA2ABD471SN4B						
	BLA2ABD601SN4D	600 ± 25 %		0.80	0.90		
	BLA2ABD601SN4B						
	BLA2ABD102SN4D	1000 ± 25 %	50	1.00	1.10		
	BLA2ABD102SN4B						

・Operating Temperature: - 55 °C to + 125 °C ・Storage Temperature: - 55 °C to + 125 °C

4. Style and Dimensions

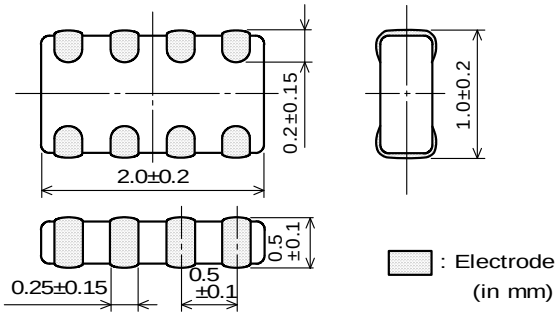

■ Equivalent Circuit

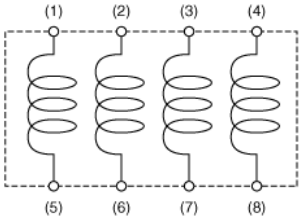

No polarity

■ Unit Mass (Typical value)
0.005g

5. Marking

No marking.

6. Standard Testing Conditions

< Unless otherwise specified >
Temperature : Ordinary Temp. 15 ºC to 35 °C
Humidity: Ordinary Humidity 25 %(RH) to 85 %(RH)

< In case of doubt >
Temperature: 20 °C ± 2 °C
Humidity : 60 %(RH) to 70 %(RH)
Atmospheric pressure: 86 kPa to 106 kPa

7. Electrical Performance

No.	Item	Specification	Test Method
7.1	Impedance	Meet item 3.	Measuring Frequency : 100 MHz ± 1 MHz Measuring Equipment : KEYSIGHT 4291A or the equivalent (OSC = 0.05 V) Test Fixture : KEYSIGHT 16192A
7.2	DC Resistance	Meet item 3.	Measuring Equipment : Digital multi meter * Except resistance of the Substrate and Wire
7.3	Insulation Resistance between Elements	Meet item 3.	Measuring Voltage : 5 V(DC) Measuring Time : 1 min max.

8. Mechancal Performance

No.	Item	Specification	Test Method
8.1	Appearance and Dimensions	Meet item 4.	Visual Inspection and measured with Slide Calipers or Micrometer or Measuring Microscope.
8.2	Bonding Strength	Meet Table 1. Table 1 Appearance: No damage Impedance Change (at 100MHz): Within ± 30 % DC Resistance: Meet item 3.	It shall be soldered on the substrate. Applying Force(F) : 9.8 N Applying Time : 5 s ± 1 s 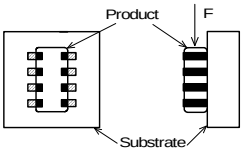
8.3	Bending Strength		It shall be soldered on the substrate. Subtrate : Glass-epoxy substrate (100mm × 40mm × 1.0mm) Deflection : 2.0 mm Speed of Applying Force : 0.5 mm / s Keeping Time : 30 s 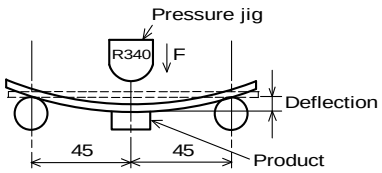

No.	Item	Specification	Test Method
8.4	Solderability	The electrodes shall be at least 95 % covered with new solder coating.	Flux : Ethanol solution of rosin, 25 (wt)% Pre-Heating : 150 °C ± 10 °C, 60 s ~ 90 s Solder :Sn-3.0Ag-0.5Cu Solder Temperature : 240 °C ± 5 °C Immersion Time : 3 s ± 1 s Immersion and emersion rates : 25 mm / s
8.5	Resistance to Soldering Heat	Meet Table 1.	Flux : Ethanol solution of rosin, 25 (wt)% Pre-Heating : 150 °C ± 10 °C, 60 s ~ 90 s Solder : Sn-3.0Ag-0.5Cu Solder Temperature : 270 °C ± 5 °C Immersion Time : 10 s ± 1 s Immersion and emersion rates : 25 mm / s Then measured after exposure in the room condition for 48 h ± 4 h.
8.6	Vibration		It shall be soldered on the substrate. Osclilation Frequency : 10Hz to 55Hz to 10Hz for 1 min Total Amplitude : 1.5 mm Testing Time : A period of 2 hours in each of 3 mutually erpendicular directions.
8.7	Drop	Product shall be no failure after tested.	It shall be dropped on concrete or steel board. Method : free fall Height : 75 cm Attitude from which the product is dropped : 3 directions The Number of Time : 3 times for each direction (Total 9 times)

9. Environmental Performance (It shall be soldered on the substrate.)

No.	Item	Specification	Test Method
9.1	Temperature Cycle	Meet Table 1.	1 cycle 1 step : -55 °C (+0 °C , -3 °C) / 30min ± 3min 2 step: Ordinary temp. / 10min to 15min 3 step : +125 °C (+3 °C , -0 °C) / 30min ± 3min 4 step: Ordinary temp. / 10min to 15min Total of 100 cycles Then measured after exposure in the room condition for 48 h ± 4 h.
9.2	Humidity		Temperature : 40 °C ± 2 °C Humidity : 90 %(RH) to 95 %(RH) Time : 1000 h (+48 h , -0 h) Then measured after exposure in the room condition for 48 h ± 4 h.
9.3	Heat Life		Temperature : 125 C ± 3 °C Applying Current : Rated Current Time : 1000 h (+48 h , -0 h) Then measured after exposure in the room condition for 48 h ± 4 h.
9.4	Cold Resistance		Temperature : - 55 °C ± 2 °C Time : 1000 h (+48 h , -0 h) Then measured after exposure in the room condition for 48 h ± 4 h.

10. Specification of Packaging

10.1. Appearance and Dimensions (8 mm-wide paper tape)

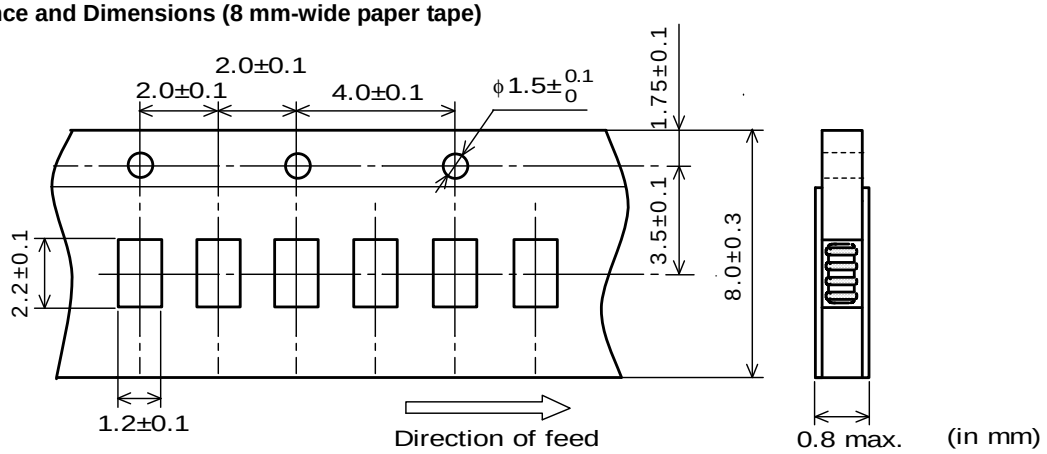

(1) Taping
Products shall be packaged in the cavity of the base tape of 8 mm-wide , 2 mm-pitch continuously and sealed by top tape and bottom tape.
(2) The sprocket holes are to the right as the tape is pulled toward the user.
(3) Splice point : The base tape and top tape have no spliced point
(4) Cavity : There shall not be burr in the cavity.
(5) Missing components number
Missing components number within 0.025% of the number per reel or 1 pc., whichever is greater, and are not continuous. The specified quantity per reel is kept.

10.2. Tape Strength

(1) Pull Strength

Top tape	5N min.
Bottom tape	

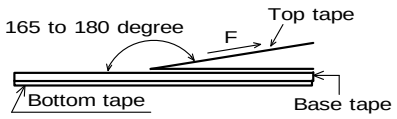

(2) Peeling off force of Top tape
0.1N to 0.6N (Minimum value is typical.)
∗ Speed of Peeling off : 300 mm / min

10.3. Taping Condition

(1) Standard quantity per reel
Quantity per 180 mm reel : 10000 pcs. / reel
(2) There shall be leader-tape (top tape and empty tape) and trailer-tape (empty tape) as follows.
(3) On paper tape, the top tape and the base tape shall no be adhered at the tip of the empty leader tape for more than 5 pitch.
(4) Marking for reel
The following items shall be marked on a label and the label is stuck on the reel.
(Customer part number, MURATA part number, Inspection number(∗1), RoHS discrimination(∗2), Quantity, etc)

∗1) « Expression of Inspection No. » □□ OOOO XXX
(1) (2) (3)

(1) Factory Code
(2) Date First digit : Year / Last digit of year
Second digit : Month / Jan. to Sep. → 1 to 9, Oct. to Dec. → O, N, D
Third, Fourth digit : Day
(3) Serial No.

∗2) « Expression of RoHS discrimination » ROHS – Y (△)
(1) (2)

(1) RoHS regulation conformity parts.
(2) MURATA classification number

(5) Outside package

These reels shall be packed in the corrugated cardboard package and the following items shall be marked on a label and the label is stuck on the box.

(Customer name, Purchasing Order Number, Customer Part Number, MURATA part number, RoHS discrimination(∗2) , Quantity , etc)

(6) Dimensions of reel and taping (leader-tape , trailer-tape)

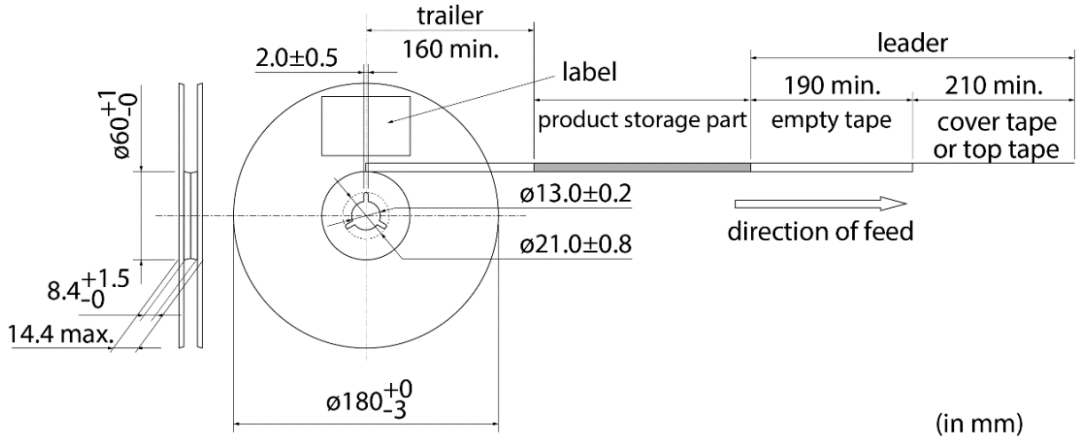

10-4. Specification of Outer Case

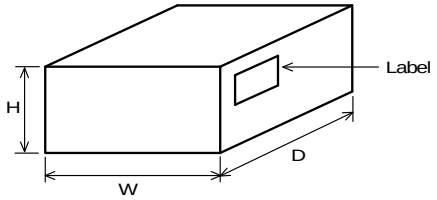

Outer Case Dimensions (mm)			Standard Reel Quantity in Outer Case (Reel)
W	D	H	
186	186	93	5

∗ Above Outer Case size is typical. It depends on a quantity of an order.

11. ⚠ Caution

11.1. Surge current

Excessive surge current (pulse current or rush current) than specified rated current applied to the product may cause a critical failure, such as an open circuit, burnout caused by excessive temperature rise.
Please contact us in advance in case of applying the surge current.

11.2. Limitation of Applications

Please contact us before using our products for the applications listed below which require especially high reliability for the prevention of defects which might directly cause damage to the third party's life, body or property.

(1) Aircraft equipment
(2) Aerospace equipment
(3) Undersea equipment
(4) Power plant control equipment
(5) Medical equipment
(6) Disaster prevention / crime prevention equipment
(7) Traffic signal equipment
(8) Transportation equipment (vehicles, trains, ships, etc.)
(9) Data-processing equipment
(10) Application of similar complexity and/or with reliability Requirements to the applications listed in the above.

12. Notice

This product is designed for solder mounting.
Please consult us in advance for applying other mounting method such as conductive adhesive.

12.1. Land pattern designing

・Standard land dimensions (Reflow soldering)

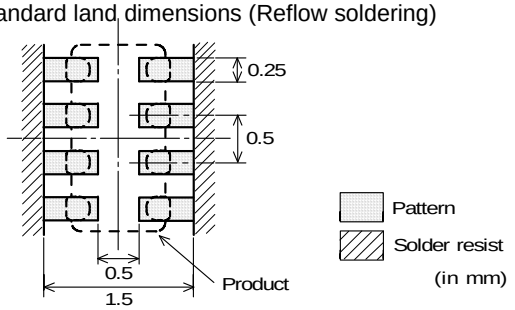

＊The excessive heat by land pads may cause deterioration at joint of products with substrate.

12.2. Soldering Conditions

Products can be applied to reflow soldering.

(1) Flux , Solder

Flux	Use rosin-based flux, but not highly acidic flux (with chlorine content exceeding 0.2(wt)%.) Do not use water-soluble flux.
Solder	Use Sn-3.0Ag-0.5Cu solder Standard thickness of solder paste : 100 µm to 200 µm Use of Sn-Zn based solder will deteriorate performance of products. In case of using Sn-Zn based solder, please contact Murata in advance.

(2) Soldering conditions

· Pre-heating should be in such a way that the temperature difference between solder and ferrite surface is limited to 150°C max. Also cooling into solvent after soldering should be in such a way that the temperature difference is limited to 100 °C max.
Insufficient pre-heating may cause cracks on the ferrite, resulting in the deterioration of product quality.

· Standard soldering profile and the limit soldering profile is as follows.
The excessive limit soldering conditions may cause leaching of the electrode and / or resulting in the deterioration of product quality.

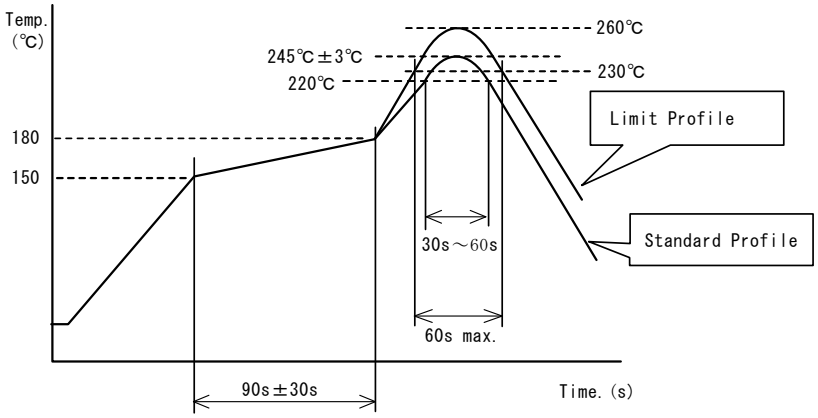

	Standard Profile	Limit Profile
Pre-heating	150～180°C 、90s±30s	
Heating	above 220°C、30s～60s	above 230°C、60s max.
Peak temperature	245±3°C	260°C,10s
Cycle of reflow	2 times	2 times

12.3. Reworking with soldering iron

· Pre-heating : 150 °C , 1 min · Soldering iron output : 80W max.
· Tip temperature: 350°C max. · Tip diameter: ϕ 3mm max.
· Soldering time : 3(+1,-0) seconds. ·Times : 2times max.
Note : Do not directly touch the products with the tip of the soldering iron in order to prevent the crack on the ferrite material due to the thermal shock.

12.4. Solder Volume

Solder shall be used not to be exceeded as shown below.
Accordingly increasing the solder volume, the mechanical stress to product is also increased.
Exceeding solder volume may cause the failure of mechanical or electrical performance.

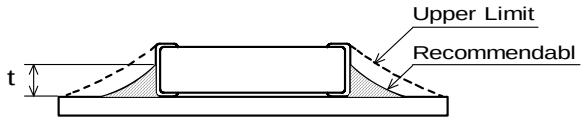

1/3T≦t≦T
(T:Chip thickness)

12.5. Attention regarding P.C.B bending

The following shall be considered when designing and laying out P.C.B.'s

(1) P.C.B. shall be designed so that products are not subject to the mechanical stress for board warpage.
<Products direction>

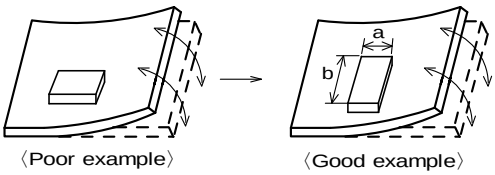

Products shall be locatedin the sideways direction (Length : a < b) to the mechanical stress.

(2)Components location on P.C.B. separation.

It is effective to implement the following measures, to reduce stress in separating the board.
It is best to implement all of the following three measures; however, implement as many measures as possible to reduce stress.

Contents of Measures	Stress Level
(1) Turn the mounting direction of the component parallel to the board separation surface.	A > D *1
(2) Add slits in the board separation part.	A > B
(3) Keep the mounting position of the component away from the board separation surface.	A > C

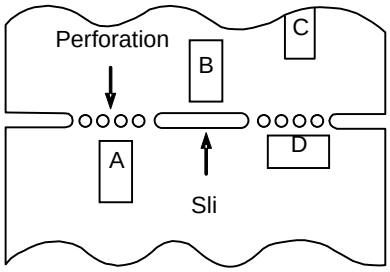

*1 A > D is valid when stress is added vertically to the perforation as with Hand Separation.
If a Cutting Disc is used, stress will be diagonal to the PCB, therefore A > D is invalid.

(3) Mounting Components Near Screw Holes

When a component is mounted near a screw hole, it may be affected by the board deflection that occurs during the tightening of the screw. Mount the component in a position as far away from the screw holes as possible.

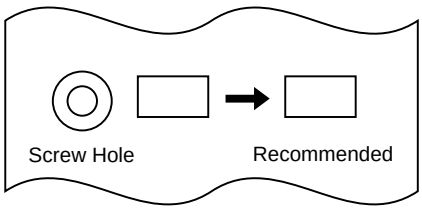

12.6. Potential between Elements

Products should be used within 5 V(DC) between elements.
When the products are used the excessive voltage over 5 V(DC) , it may cause breaking of inner electrade and / or decreasing o insulation resistance between elements.

12.7. Mounting density

Add special attention to radiating heat of products when mounting the inductor near the products with heating.
The excessive heat by other products may cause deterioration at joint of this product with substrate.

12.8. Cleaning

Excessive ultrasonic oscillation during cleaning can cause the PCBs to resonate, resulting in cracked chips or broken solder joints. Before starting your production process, test your cleaning equipment / process to insure it does not degrade this product.

12.9. Handling of a substrate

After mounting products on a substrate, do not apply any stress to the product caused by bending or twisting to the substrate when cropping the substrate, inserting and removing a connector from the substrate or tightening screw to the substrate.
Excessive mechanical stress may cause cracking in the product.

Bending

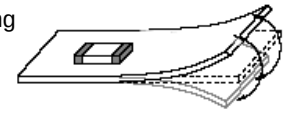

Twisting

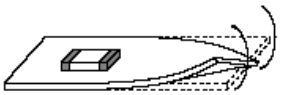

12.10. Operating Environment

Do not use this product under the following environmental conditions, on deterioration of the Insulation Resistance of the Ferrite material and/or corrosion of Inner Electrode may result from the use.

(1) In the corrodible atmosphere such as acidic gases, alkaline gases, chlorine, sulfur gases, organic gases and etc.
(the sea breeze, Cl_2, H_2S, NH_3, SO_2, NO_2,etc)
(2) In the atmosphere where liquid such as organic solvent, may splash on the products.
(3) In the atmosphere where the temperature / humidity changes rapidly and it is easy to dew.

12.11. Resin coating

The impedance value may change and/or it may affect on the product's performance due to high cure-stress of resin to be used for coating / molding products. So please pay your careful attention when you select resin. In prior to use, please make the reliability evaluation with the product mounted in your application set.

12.12. Storage Conditions

(1) Storage period
Use the products within 6 months after delivered.
Solderability should be checked if this period is exceeded.

(2) Storage coditions
· Products should be stored in the warehouse on the following conditions.
Temperature : - 10 °C to 40 °C
Humidity : 15 % to 85 % relative humidity
No rapid change on temperature and humidity
· Don't keep products in corrosive gases such as sulfur, chlorine gas or acid, or it may cause oxidization of electrode, resulting in poor solderability.
· Products should be stored on the palette for the prevention of the influence from humidity, dust and so on.
· Products should be stored in the warehouse without heat shock, vibration, direct sunlight and so on.
· Avoid storing the product by itself bare (i.e. exposed directly to air).

(3) Delivery
Care should be taken when transporting or handling product to avoid excessive vibration or mechanical shock.

13. ⚠ Notes

(1) Please make sure that your product has been evaluated in view of your specifications with our product being mounted to your product.

(2) You are requested not to use our product deviating from the reference specifications.

(3) The contents of this reference specification are subject to change without advance notice. Please approve our product specifications or transact the approval sheet for product specifications before ordering.

Part Numbering

Chip Ferrite Bead

(Part Number)

BL	M	18	AG	102	S	N	1	D
❶	❷	❸	❹	❺	❻	❼	❽	❾

❶Product ID

Product ID	
BL	Chip Ferrite Beads

❷Type

Code	Type
A	Array Type
E	DC Bias Characteristics Improved Type
M	Ferrite Bead Single Type
T	Assembly Type

❹Characteristics/Applications

Code *1	Characteristics/Applications
AG	For General Use
AX	
TG	
BA	For High-speed Signal Lines
BB	
BC	
BD	
BX	
KD	For Power Lines
KG	
KN	
KX	
PD	
PG	
PN	
PS	
PX	
PT	
SD	
SG	
SN	
SP	
RK	For Digital Interface
HG	For GHz Band General Use
EB	For GHz Band High-speed Signal Lines (Low Direct Current Type)
EG	For GHz Band General Use (Low DC Resistance Type)
EX	
HB	For GHz Band High-speed Signal Lines
HD	
HE	
HK	For GHz Band Digital Interface
GA	For High-GHz Band High-speed Signal Lines
GG	For High-GHz Band General Use
DN	For High-GHz Band General Use (Low Direct Current Type)

*1 Frequency characteristics vary with each code.

❸Dimensions (LxW)

Code	Dimensions (LxW)	Size Code (inch)
02	0.4x0.2mm	01005
03	0.6x0.3mm	0201
15	1.0x0.5mm	0402
18	1.6x0.8mm	0603
2A	2.0x1.0mm	0804
21	2.0x1.25mm	0805
31	3.2x1.6mm	1206
32	3.2x2.5mm	1210
41	4.5x1.6mm	1806
5B	5.0x5.0mm	2020

❺Impedance

Expressed by three figures. The unit is in ohm (Ω) at 100MHz. The first and second figures are significant digits, and the third figure expresses the number of zeros that follow the two figures.

❻Electrode

Expressed by a letter.

Ex.)

Code	Electrode
S/F/T	Sn Plating
A	Au Plating
L	Lead-Free Solder Plating

❼Category

Code	Category
N	For General-Purpose

❽Number of Circuits

Code	Number of Circuits
1	1 Circuit
4	4 Circuits

❾Packaging

Code	Packaging
K	Embossed Taping (ø330mm Reel)
L	Embossed Taping (ø180mm Reel)
B	Bulk
J	Paper Taping (ø330mm Reel)
D	Paper Taping (ø180mm Reel)