MARK	DESCRIPTION

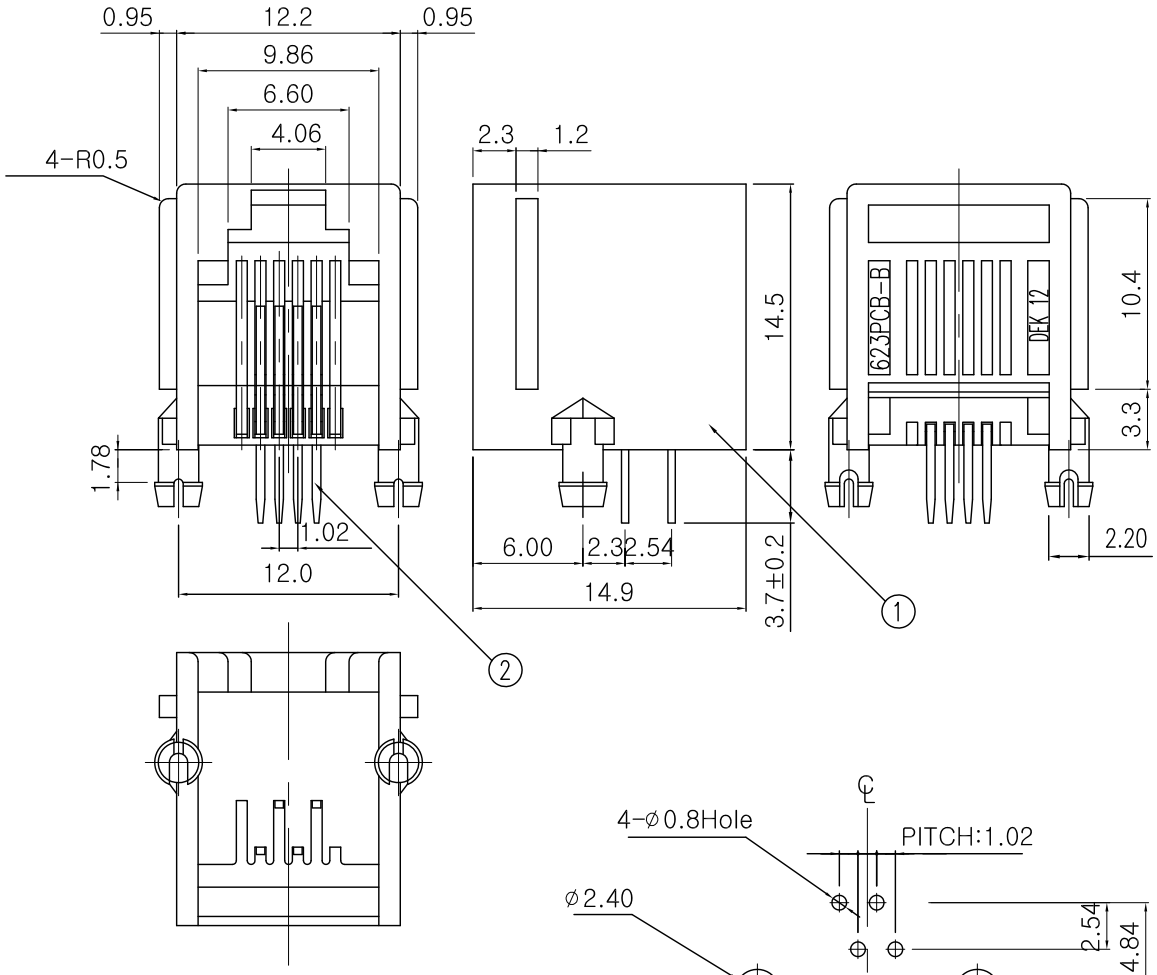

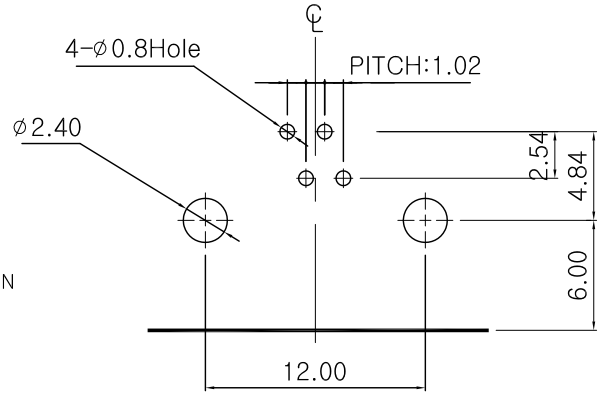

PCB LAYOUT

NOTE

1. GOLD PLATING THICKNESS IS 3, 6 , 15 , 30 , 50 M-IN
2. Ni PLATING THICKNESS IS 100 M-IN ,
   SOLDER AREA Sn(PB FREE)
3. FCC TEST CONDITION ARE SATISFIED
4. MATERIAL IS UL APPROVED
5. THIS PARTS DO NOT CONTAIN ANY HAZARD MATERIALS.
6. OTHERWISE TOLERANCE .0=±0.2, .00=±0.01

NO	部 番 PART NO.	名 稱 TITLE	材 料 MATERIAL	規 格 SPECIFICATION	處 理 TREATMENT	備 考 REMARK
2		CONTACT PLATE	PHOSPHOR BRONZE	0.4t		
1		HOUSING	PBT		COLOR : BLACK	UL94V-0
					COLOR : White Gray	

MARK	DATE	APPR	CHECK	DESIGN	三角法 THIRD ANGLE PROJECTION	單位 (mm) UNIT INCH	尺度 SCALE N/S	提出先 USER	MODULAR JACK ASS'Y
					丞認 APPROVAL	檢圖 CHECK	設計 DESIGN	圖名 TITLE	623PCB4-B.P
								圖番 Drawing No.	

DEK 대은전자주식회사

DEK개발 007모 A4(06. 11. 21)