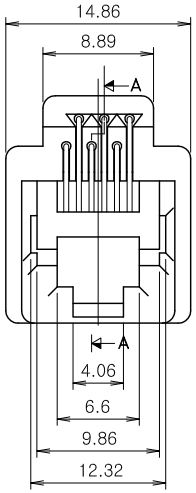

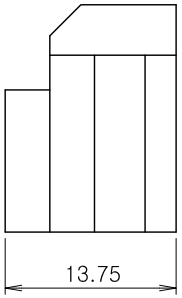

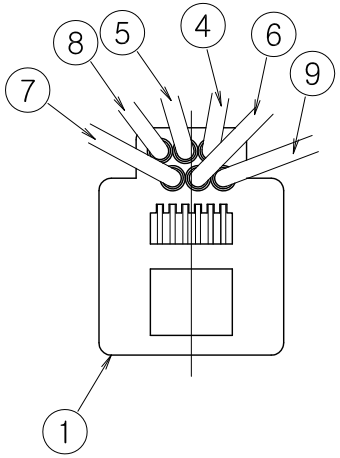

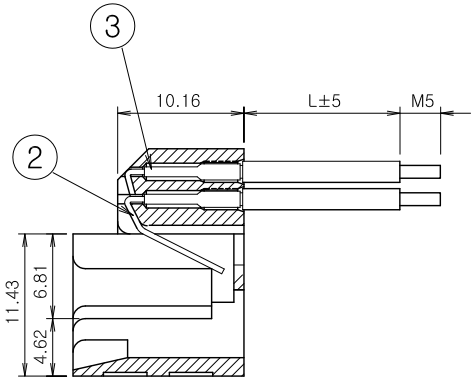

SECTION A-A

NO.	PART NAME	MATERIAL	COLOR	L	SIZE	SPEC	REMARKS
9	INSULATION WIRE	P V C	BL	70	AWG26	HI-LAP	UL 1061
8	INSULATION WIRE	P V C	WH	70	AWG26	HI-LAP	UL 1061
7	INSULATION WIRE	P V C	BK	70	AWG26	HI-LAP	UL 1061
6	INSULATION WIRE	P V C	GN	70	AWG26	HI-LAP	UL 1061
5	INSULATION WIRE	P V C	RD	70	AWG26	HI-LAP	UL 1061
4	INSULATION WIRE	P V C	YL	70	AWG26	HI-LAP	UL 1061
3	HOLDING PLATE	BRASS			t0.23		
2	GOLD WIRE	PHOSPHOROUS BRONZE			ø0.45		GOLD OVER NICKEL
1	HOUSING	ABS	GRAY				UL94V-0

NOTE

1. GOLD PLATING THICKNESS IS 15 M-IN.
2. FCC TEST CONDITIONS ARE SATISFIED
3. MATERIALS ARE UL APPROVED (UL NO. E134225)
4. OTHERWISE TOLERANCE:
   .0=±0.2 .00=±0.1

部番	PART NO.	名	TITLE	鉛料	MATERIAL	規格	SPECIFICATION	処理	TREATMENT	備考	REMARK	ELECTRONICS	
				三角法 THIRD ANGLE PROJECTION		單 UNIT mm INCH	度 SCALE N/S	□□狆 USER				MODULAR JACK ASSY.	
				審 APPROVAL		檢圖 CHECK	設計 DESIGN	圖名 TITLE				623K6-70-M5	
MARK	DATE	APPR	CHECK	DESIGN				圖番 DRAWG. NO.					

DEK 개발 007 모 A4(01. 09. 01)

DEK