TC-0302 SERIES

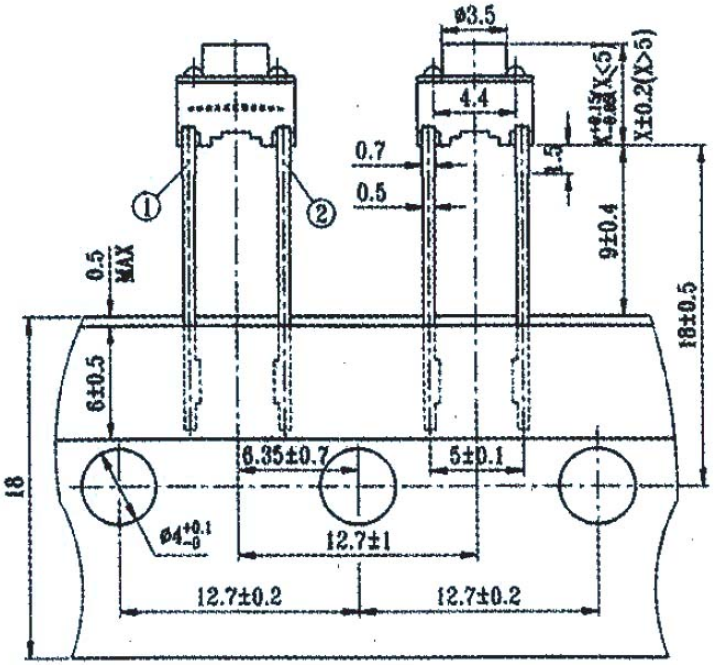

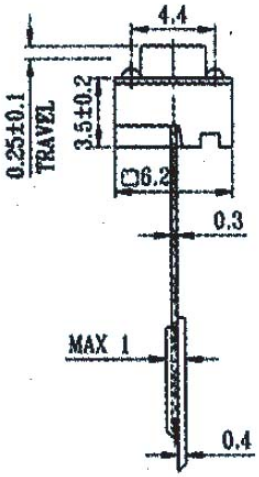

MODEL NO.	Stem Length(mm)
TC-0302	4.3
TC-0303	5
TC-0304	7
TC-0305	7.3
TC-0306	8
TC-0308	9.5
TC-0309	12.5

CODE	OPERATING FORCE (gf)
T	100 ± 30
V	130 ± 30
X	160 ± 50
W	170 ± 50
Y	190 ± 50
Z	250 ± 100

CIRCUIT DIAGRAM

SPECIFICATIONS

1. RATING : DC 12V 50mA
2. TRAVEL : 0.25 ± 0.1mm
3. CONTACT RESISTANCE 100 mΩ MAX

Return