Part Numbering

Inductors for Power Lines

(Part Number)

LQ	M	21	P	N	R54	M	G	0	D
❶	❷	❸	❹	❺	❻	❼	❽	❾	❿

❶Product ID

Product ID	
LQ	Chip Inductors (Chip Coils)

❷Structure

Code	Structure
H	Wire Wound Type (Ferrite Core)
M	Multilayer Type (Ferrite Core)
W	Wire Wound Type (Ferrite Core)

❸Dimensions (LxW)

Code	Nominal Dimensions (LxW)	Size Code (in inch)
15	1.0x0.5mm	0402
18	1.6x0.8mm	0603
21	2.0x1.25mm	0805
2M	2.0x1.6mm	0806
2H	2.5x2.0mm	1008
3N	3.0x3.0mm	1212
31	3.2x1.6mm	1206
32	3.2x2.5mm	1210
43	4.5x3.2mm	1812
44	4.0x4.0mm	1515
5B	5.0x5.0mm	2020
55	5.7x5.0mm	2220
66	6.3x6.3mm	2525

❹Applications and Characteristics

Code	Series	Applications and Characteristics
D	LQM	for Choke (Low-current DC Power Supplies)
F		for Choke (DC Power Supplies)
D	LQH	for Choke
S		for Choke (Magnetically Shielded Type)
C		for Choke (Coating Type)
P	LQM/LQH	for Power Line
C	LQW	
D	LQW	for Power Line (Large Inductance Type)

❺Category

Code	Category	
N	Standard Type	
B	Special Feature Classification	
W		
E		
Z	Automotive	Infotainment
H		Powertrain/Safety

❻Inductance

Expressed by three-digit alphanumerics. The unit is micro-henry (μH). The first and second figures are significant digits, and the third figure expresses the number of zeros that follow the two figures. If there is a decimal point, it is expressed by the capital letter "**R**." In this case, all figures are significant digits. If inductance is less than 0.1μH, the inductance code is expressed by a combination of two figures and the capital letter "**N**," and the unit of inductance is nano-henry (nH). The capital letter "**N**" indicates the unit of "nH," and also expresses a decimal point. In this case, all figures are significant digits. For those products whose inductance values are specified using three designated digits, these values may be indicated using the closest two digits instead.

❼Inductance Tolerance

Code	Inductance Tolerance
K	±10%
M	±20%
N	±30%

❽Features (Except for **LQH□□P/LQM□□P**)

Code	Features	Series
0	Standard Type	**LQM/LQH/LQW**
2	Standard Type	**LQH32C/32D**
3	Low DC Resistance	**LQH32C/43CN**
5	Low Profile Type	**LQH2MC/32C/32D**
7	Large Current Type	**LQM18D/21D/21F**
8	Low DC Resistance /Large Current Type	**LQM21F**

❽Thickness

(**LQH□□P/LQM□□P** Only ▪ Except for **LQH43P/LQH5BPN_38**)

Code	Nominal Dimensions (T)
B	0.35mm
C	0.5mm
D	0.6mm
E	0.7mm
F	0.8mm
0	0.85mm
G	0.9mm
J	1.1mm
M	1.4mm
N	1.55mm
P	1.65mm
T	2.0mm

Continued on the following page.↗

Continued from the preceding page.↘

❾Electrode (Except for **LQH□□P/LQM□□P**)

•Lead (Pb) Free

Code	Electrode	Series
0	Sn	**LQM/LQW**
2		**LQH2MC**
3	LF Solder	**LQH** (Except for **LQH2MC**)

❾Specification

(**LQH□□P/LQM□□P** Only • Except for **LQH43P/LQH5BPN_38**)

Code	Specification
0/S	Standard Type
C	Good Bias Current Characteristics Type
H/A/E	High Spec Type (Low DC Resistance; Good Bias Current Characteristics Type)
R	Low DC Resistance Type

❽❾Thickness (**LQH43P/LQH5BPN_38** Only)

Code	Dimensions (T)
26	2.6mm
38	4.0mm max.

❿Packaging

Code	Packaging
K	Embossed Taping (ø330mm Reel)
F	
L	Embossed Taping (ø180mm Reel)
E	
B	Bulk
J	Paper Taping (ø330mm Reel)
D	Paper Taping (ø180mm Reel)

Chip Coil (Chip Inductor) LQH44PN□□□□PR□ Reference Specification

1. Scope

This reference specification applies to chip coil (chip inductor) LQH44PN□□□□PR□ series for general electronic equipment.

2. Part Numbering

(Ex.)

LQ	H	44	PN	1R0	M	PR	L
Product ID	Type	Dimension (L × W)	Application and characteristic	Inductance	Tolerance	Category	Packaging L: taping *B: bulk

*B: Bulk packing is also available.
(The product sealed on the carrier tape is stored in a plastic bag.)

3. Part Number and Rating

Operating temperature range	(ambient temperature not including self-temperature rise)	-40°C to +85°C
	(product temperature including self-temperature rise)	-40°C to +125°C
Storage temperature range		-40°C to +125°C

Customer Part number	Murata Part number	Inductance		DC resistance (Ω)	Self-resonant frequency (MHz min.)	Rated current* (mA)	
		Nominal value (μH)	Tolerance (%)			Based on inductance change	Based on temperature rise
	LQH44PN1R0MPRL	1.0	±20	0.025±20%	85	4300	3200
	LQH44PN2R2MPRL	2.2	±20	0.042±20%	55	3300	2400
	LQH44PN3R3MPRL	3.3	±20	0.055±20%	40	2300	2000
	LQH44PN4R7MPRL	4.7	±20	0.065±20%	40	2050	1900
	LQH44PN6R8MPRL	6.8	±20	0.100±20%	30	1850	1500
	LQH44PN100MPRL	10	±20	0.150±20%	25	1450	1250
	LQH44PN150MPRL	15	±20	0.200±20%	18	1300	1100
	LQH44PN220MPRL	22	±20	0.290±20%	17	1050	900
	LQH44PN330MPRL	33	±20	0.460±20%	12	880	740
	LQH44PN470MPRL	47	±20	0.650±20%	9	750	600
	LQH44PN680MPRL	68	±20	1.00±20%	8	580	500
	LQH44PN101MPRL	100	±20	1.30±20%	6	460	400
	LQH44PN151MPRL	150	±20	2.20±20%	5	400	330
	LQH44PN221MPRL	220	±20	3.15±20%	4	330	280

* Keep the temperature (ambient temperature plus self-generation of heat) under 125°C.

4. Testing Conditions

Unless otherwise specified	Temperature: ordinary temperature (15°C to 35°C) Humidity: ordinary humidity [25% to 85% (RH)]
In case of doubt	Temperature: 20°C±2°C Humidity: 60% to 70% (RH) Atmospheric pressure: 86 kPa to 106 kPa

5. Appearance and Dimensions

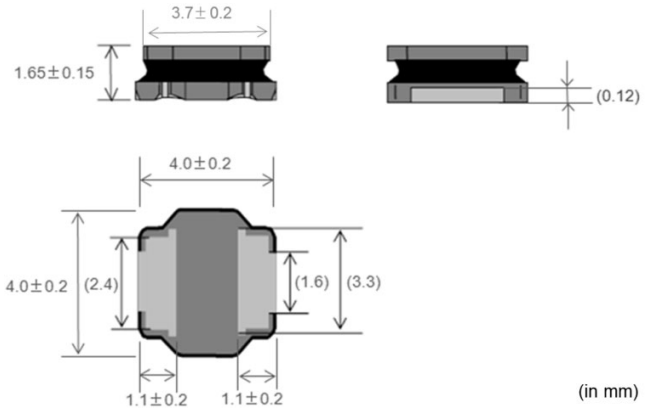

(in mm)

■ Equivalent Circuit

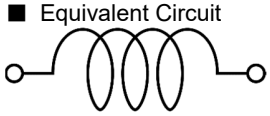

no polarity

Unit mass (typical value): 0.105 g

6. Marking

No marking.

7. Electrical Performance

No.	Item	Specification	Test method
7.1	Inductance	Meet chapter 3 ratings.	Measuring equipment: Keysight 4284A or the equivalent Measuring frequency: 100 kHz
7.2	DC resistance	Meet chapter 3 ratings.	Measuring equipment: digital multimeter
7.3	Self-resonant frequency	Meet chapter 3 ratings.	Measuring equipment: Keysight E4991A or the equivalent
7.4	Rated current (Based on inductance change)	When rated current is applied to the products, inductance will be within ±30% of initial inductance value range.	Apply the rated current specified in chapter 3 at ordinary temperature.
7.5	Rated current (Based on temperature rise)	Temperature rise caused by self-generated heat shall be limited to 40°C max.	Apply the rated current specified in chapter 3 at ordinary temperature.

8. Mechanical Performance

The product is soldered on a substrate for test.(Except Resistance to soldering heat, Solderability)
(Test shall be done using Flux, Solder and Soldering condition which are specified in chapter 12 except the case of being specified special condition.)

No.	Item	Specification	Test method
8.1	Shear test	No significant mechanical damage or no sign of electrode peeling off shall be observed.	Applying force: 10 N Holding time: 5 s Force application direction: 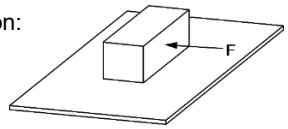
8.2	Bending test	No significant mechanical damage or no sign of electrode peeling off shall be observed.	Test substrate: glass-epoxy substrate (100 mm × 40 mm × 1.6 mm) Pressurizing speed: 0.08 mm/s Pressure jig: R230 Amount of bending: 2 mm Holding time: 5 s 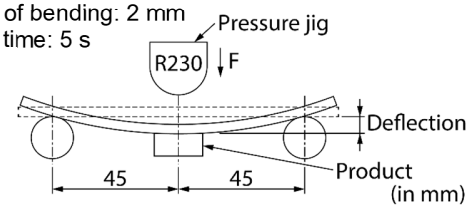
8.3	Vibration	Appearance shall have no significant mechanical damage.	Oscillation frequency: 10 Hz to 2000 Hz to 10 Hz/20 min Total amplitude: 3.0 mm or acceleration amplitude of 196 m/s2, whichever is smaller Test time: 3 directions perpendicular to each other, 2 h for each direction (6 h in total)
8.4	Resistance to soldering heat	Appearance: No significant mechanical damage shall be observed. Inductance change rate: within ±10%	Flux: Ethanol solution of rosin, 25(wt)% Pre-heating: 150°C/60 s Solder: Sn-3.0Ag-0.5Cu solder Solder temperature: 260°C±5°C Immersion time: 10 s Post-treatment: left for 4 hours to 48 hours at room temperature.
8.5	Solderability	95% or more of the outer electrode shall be covered with new solder seamlessly.	Flux: Ethanol solution of rosin, 25(wt)% Pre-heating: 150°C/60 s Solder: Sn-3.0Ag-0.5Cu solder Solder temperature: 245°C±3°C Immersion time: 3 s

9. Environmental Performance

The product is soldered on a substrate for test.
(Test shall be done using Flux, Solder and Soldering condition which are specified in chapter 12 except the case of being specified special condition.)

No.	Item	Specification	Test method
9.1	Heat resistance	Appearance: No significant mechanical damage shall be observed. Inductance change rate: within ±10% DC resistance change rate: within ±10%	Temperature: 125°C±2°C Test time: 1000 h (+48 h, -0 h) Post-treatment: left for 4 hours to 48 hours at room temperature.
9.2	Cold resistance	Appearance: No significant mechanical damage shall be observed. Inductance change rate: within ±10% DC resistance change rate: within ±10%	Temperature: -40°C±2°C Test time: 1000 h (+48 h, -0 h) Post-treatment: left for 4 hours to 48 hours at room temperature.
9.3	Humidity	Appearance: No significant mechanical damage shall be observed. Inductance change rate: within ±10% DC resistance change rate: within ±10%	Temperature: 85°C±2°C Humidity: 80% to 85% (RH) Test time: 1000 h (+48 h, -0 h) Post-treatment: left for 4 hours to 48 hours at room temperature.
9.4	Temperature cycle	Appearance: No significant mechanical damage shall be observed. Inductance change rate: within ±10% DC resistance change rate: within ±10%	Single cycle conditions: Step 1: -40°C (+0°C, -3°C), 30 min (+3 min, -0 min) Step 2: ordinary temperature, 3 min max. Step 3: +125°C (+3°C, -0°C), 30 min (+3 min, -0 min) Step 4: ordinary temperature, 3 min max. Number of testing: 100 cycles Post-treatment: left for 4 hours to 48 hours at room temperature.

10. Specification of Packaging

10.1 Appearance and dimensions of tape (12 mm width/plastic tape)

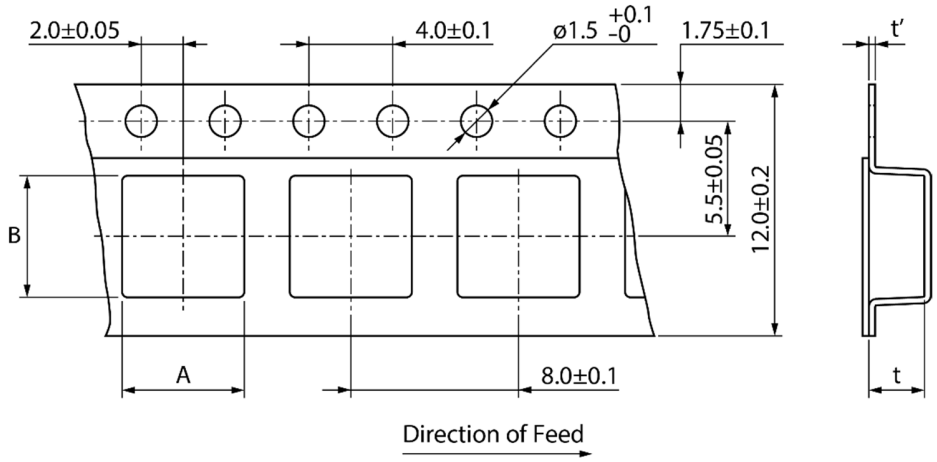

A	4.3±0.1
B	4.3±0.1
t	1.9±0.1
t'	(0.3)

(in mm)

* The dimensions of the cavity are measured at its bottom.

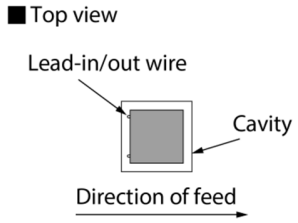

10.2 Taping specifications

Packing quantity (Standard quantity)	1000 pcs/reel
Packing method	The products are placed in cavities of a carrier tape and sealed by a cover tape (top tape and bottom tape when the cavities of the carrier tape are punched type).
Feed hole position	The feed holes on the carrier tape are on the right side when the cover tape (top tape when the cavities of the carrier tape are punched type) is pulled toward the user.
Joint	The carrier tape and cover tape (top tape when the cavities of the carrier tape are punched type) are seamless.
Number of missing products	Number of missing products within 0.025% of the number per reel or 1 pc., whichever is greater, and are not continuous. The specified quantity per reel is kept.

10.3 Break down force of tape

Cover tape (or top tape)	5 N min.
Bottom tape (only when the cavities of the carrier tape are punched type)	5 N min.

10.4 Peeling off force of tape

Speed of peeling off	300 mm/min
Peeling off force	0.1 N to 0.7 N (The lower limit is for typical value.)

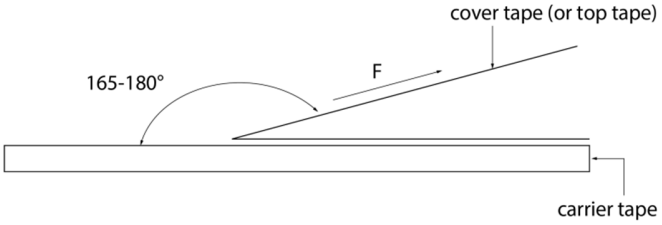

10.5 Dimensions of leader section, trailer section and reel

A vacant section is provided in the leader (start) section and trailer (end) section of the tape for the product. The leader section is further provided with an area consisting only of the cover tape (or top tape). (See the diagram below.)

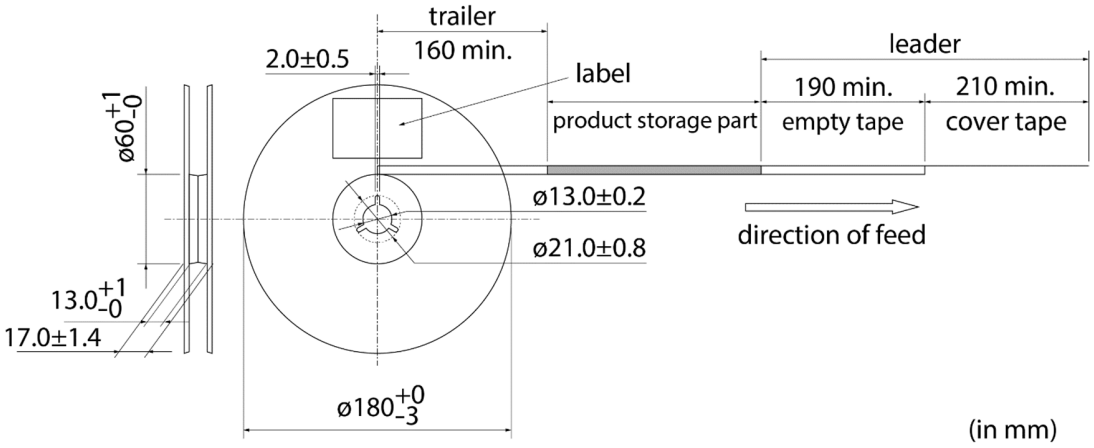

10.6 Marking for reel

Customer part number, Murata part number, inspection number (*1), RoHS marking (*2), quantity, etc.

*1 Expression of inspection No.: □□ (1) ○○○○ (2) ◇◇◇ (3)	(1) Factory code (2) Date First digit: year/last digit of year Second digit: month/Jan. to Sep.→1 to 9, Oct. to Dec.→O, N, D Third, Fourth digit: day (3) Serial No.
*2 Expression of RoHS marking: ROHS- Y (1) (△) (2)	(1) RoHS regulation conformity (2) Murata classification number

10.7 Marking on outer box (corrugated box)

Customer name, purchasing order number, customer part number, Murata part number, RoHS marking (*2), quantity, etc.

10.8 Specification of outer box

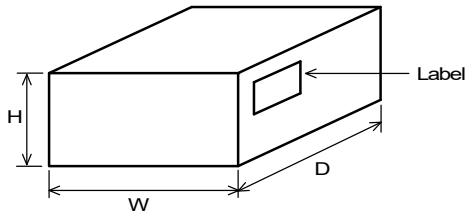

Dimensions of outer box (mm)			Standard reel quantity in outer box (reel)
W	D	H	
186	186	93	5
* Above outer box size is typical. It depends on a quantity of an order.			

11. ⚠Caution

11.1 Restricted applications

Please contact us before using our products for the applications listed below which require especially high reliability for the prevention of defects which might directly cause damage to the third party's life, body or property.

(1) Aircraft equipment
(2) Aerospace equipment
(3) Undersea equipment
(4) Power plant control equipment
(5) Medical equipment
(6) Transportation equipment (vehicles, trains, ships, etc.)
(7) Traffic signal equipment
(8) Disaster/crime prevention equipment
(9) Data-processing equipment
(10) Applications of similar complexity and/or reliability requirements to the applications listed in the above

11.2 Precautions on rating

Avoid using in exceeded the rated temperature range, rated voltage, or rated current.
Usage when the ratings are exceeded could lead to wire breakage, burning, or other serious fault.

11.3 Inrush current

If an inrush current (or pulse current or rush current) that significantly exceeds the rated current is applied to the product, overheating could occur, resulting in wire breakage, burning, or other serious fault.

11.4 Corrosive gas

Please refrain from use since contact with environments with corrosive gases (sulfur gas [hydrogen sulfide, sulfur dioxide, etc.], chlorine, ammonia, etc.) or oils (cutting oil, silicone oil, etc.) that have come into contact with the previously stated corrosive gas environment will result in deterioration of product quality or an open from deterioration due to corrosion of product electrode, etc. We will not bear any responsibility for use under these environments.

12. Precautions for Use

This product is for use only with reflow soldering. It is designed to be mounted by soldering. If you want to use other mounting method, for example, using a conductive adhesive, please consult us beforehand.
Also, if repeatedly subjected to temperature cycles or other thermal stress, due to the difference in the coefficient of thermal expansion with the mounting substrate, the solder (solder fillet part) in the mounting part may crack.
The occurrence of cracks due to thermal stress is affected by the size of the land where mounted, the solder volume, and the heat dissipation of the mounting substrate. Carefully design it when a large change in ambient temperature is assumed.

12.1 Land dimensions

The following diagram shows the recommended land dimensions for reflow soldering.

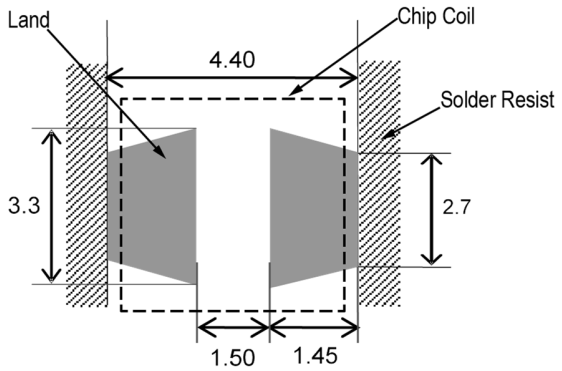

(in mm)

12.2 Flux and solder used

Flux	• Use a rosin-based flux. • Do not use a highly acidic flux with a halide content exceeding 0.2(wt)% (chlorine conversion value). • Do not use a water-soluble flux.
Solder	• Use Sn-3.0Ag-0.5Cu solder. • Standard thickness of solder paste: 100 μm to 150 μm

If you want to use a flux other than the above, please consult our technical department.

12.3 Soldering conditions (reflow)

- Pre-heating should be in such a way that the temperature difference between solder and product surface is limited to 100°C max.
  Cooling into solvent after soldering also should be in such a way that the temperature difference is limited to 100°C max.
  Insufficient pre-heating may cause cracks on the product, resulting in the deterioration of product quality.
- Standard soldering profile and the limit soldering profile is as follows.
  The excessive limit soldering conditions may cause leaching of the electrode and/or resulting in the deterioration of product quality.

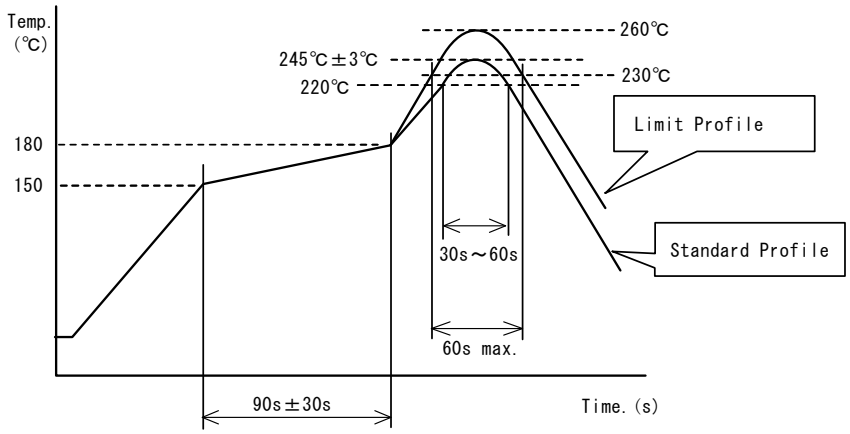

	Standard profile	Limit profile
Pre-heating	150°C to 180°C/90 s±30 s	150°C to 180°C/90 s±30 s
Heating	Above 220°C/30 s to 60 s	Above 230°C/60 s max.
Peak temperature	245°C±3°C	260°C/10 s
Number of reflow cycles	2 times	2 times

12.4 Reworking with soldering iron

The following requirements must be met to rework a soldered product using a soldering iron.

Item	Requirement
Pre-heating	150°C/approx. 1 min
Tip temperature of soldering iron	380°C max.
Power consumption of soldering iron	80 W max.
Tip diameter of soldering iron	ø3 mm max.
Soldering time	3 s (+1 s, -0 s)
Number of reworking operations	2 times max.
* Avoid a direct contact of the tip of the soldering iron with the product. Such a direction contact may cause cracks in the ceramic body due to thermal shock.	

12.5 Solder volume

Solder shall be used not to increase the volume too much.
An increased solder volume increases mechanical stress on the product. Exceeding solder volume may cause the failure of mechanical or electrical performance.

12.6 Product's location

The following shall be considered when designing and laying out PCBs.

(1) PCB shall be designed so that products are not subject to mechanical stress due to warping the board.

[Products direction]

Products shall be located in the sideways direction (length: a < b) to the mechanical stress.

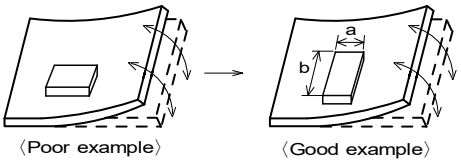

(2) Components location on PCB separation

It is effective to implement the following measures, to reduce stress in separating the board.

It is best to implement all of the following three measures; however, implement as many measures as possible to reduce stress.

Contents of measures	Stress level
(1) Turn the mounting direction of the component parallel to the board separation surface.	A > D*1
(2) Add slits in the board separation part.	A > B
(3) Keep the mounting position of the component away from the board separation surface.	A > C
*1 A > D is valid when stress is added vertically to the perforation as with hand separation. If a cutting disc is used, stress will be diagonal to the PCB, therefore A > D is invalid.	

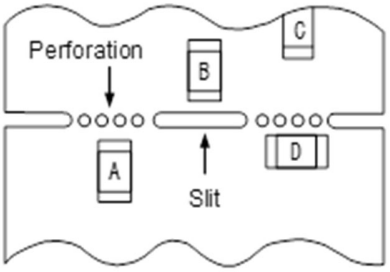

(3) Mounting components near screw holes

When a component is mounted near a screw hole, it may be affected by the board deflection that occurs during the tightening of the screw.

Mount the component in a position as far away from the screw holes as possible.

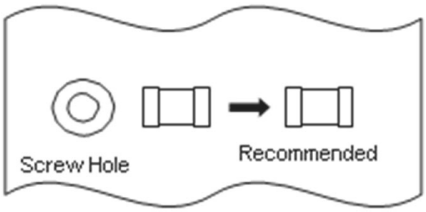

12.7 Handling of substrate

After mounting products on a substrate, do not apply any stress to the product caused by bending or twisting to the substrate when cropping the substrate, inserting and removing a connector from the substrate or tightening screw to the substrate. Excessive mechanical stress may cause cracking in the product.

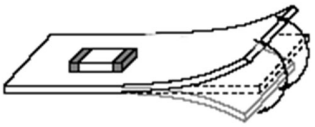

Bending

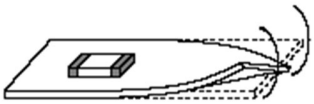

Twisting

12.8 Cleaning

Excessive ultrasonic oscillation during cleaning can cause the PCBs to resonate, resulting in cracked chips or broken solder joints. Before starting your production process, test your cleaning equipment / process to insure it does not degrade this product.

12.9 Storage and transportation

Storage period	Use the product within 12 months after delivery. If you do not use the product for more than 12 months, check solderability before using it.
Storage conditions	• The products shall be stored in a room not subject to rapid changes in temperature and humidity. The recommended temperature range is -10°C to +40°C. The recommended relative humidity range is 15% to 85%. Keeping the product in corrosive gases, such as sulfur, chlorine gas or acid may cause the poor solderability. • Do not place the products directly on the floor; they should be placed on a palette so that they are not affected by humidity or dust. • Avoid keeping the products in a place exposed to direct sunlight, heat or vibration. • Do not keep products in bulk packaging. Bulk storage could result in collisions between the products or between the products and other parts, resulting in chipping or wire breakage. • Avoid storing the product by itself bare (i.e. exposed directly to air).
Transportation	Excessive vibration and impact reduces the reliability of the products. Exercise caution when handling the products.

12.10 Resin coating (including moisture-proof coating)

When the product is coated/molded with resin, its electrical characteristics may change.
A wire breakage issue may occur by mechanical stress caused by the resin, amount/cured shape of resin, or operating condition etc.
Some resins contain impurities or hydrolyzable chlorine, which could result in corrosion of the conducting materials, leading to wire breakage.
So, please pay your careful attention when you select resin in case of coating/molding the products with the resin.
Prior to use the coating resin, please make sure no reliability issue is observed by evaluating products mounted on your board.

12.11 Mounting conditions

Check the mounting condition before using.
Using mounting conditions (nozzles, equipment conditions, etc.) that are not suitable for products may lead to pick up errors, misalignment, or damage to the product.

12.12 Operating environment

Do not use this product under the following environmental conditions as it may cause deterioration of product quality.
(1) In the corrodible atmosphere such as acidic gases, alkaline gases, chlorine, sulfur gases, organic gases and etc. (the sea breeze, Cl2, H2S, NH3, SO2, NO2, etc)
(2) In the atmosphere where liquid such as organic solvent, may splash on the products.
(3) In the atmosphere where the temperature/humidity changes rapidly and it is easy to dew.

12.13 Mounting density

If this product is placed near heat-generating products, be sure to implement sufficient heat-dissipating measures.
If this product is subjected to a significant amount of heat from other products, this could adversely affect product quality, resulting in a circuit malfunction or failure of the mounted section. Also, be sure that the product is used in a manner so that the heat that the product is subjected to from other products does not exceed the upper limit of the rated operating temperature for the product.

12.14 Handling of product

・Sharp material such as a pair of tweezers or other material such as bristles of cleaning brush , shall not be touched to the winding portion and electrode to prevent the breaking of wire.
・Mechanical shock should not be applied to the products mounted on the board to prevent the breaking of the core.

13. ⚠Note

(1) Please make sure that your product has been evaluated in view of your specifications with our product being mounted to your product.
(2) You are requested not to use our product deviating from the agreed specifications.
(3) The contents of this reference specification are subject to change without advance notice. Please approve our product specifications or transact the approval sheet for product specifications before ordering.