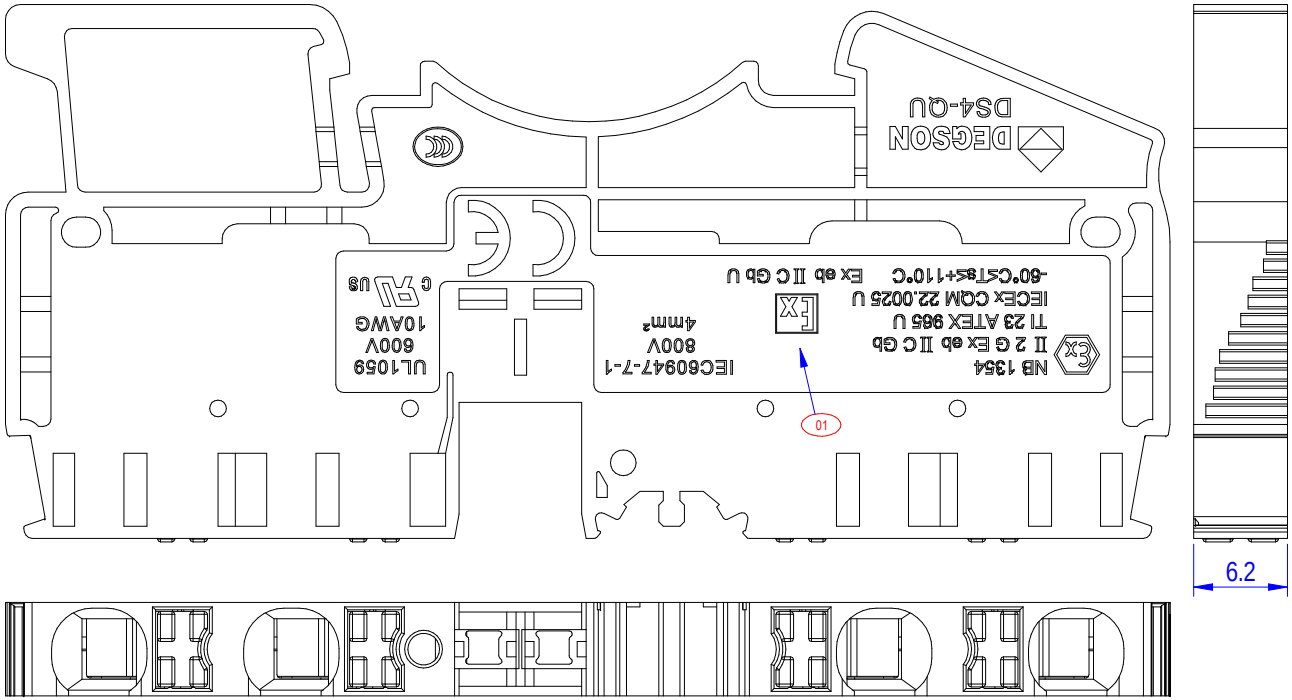

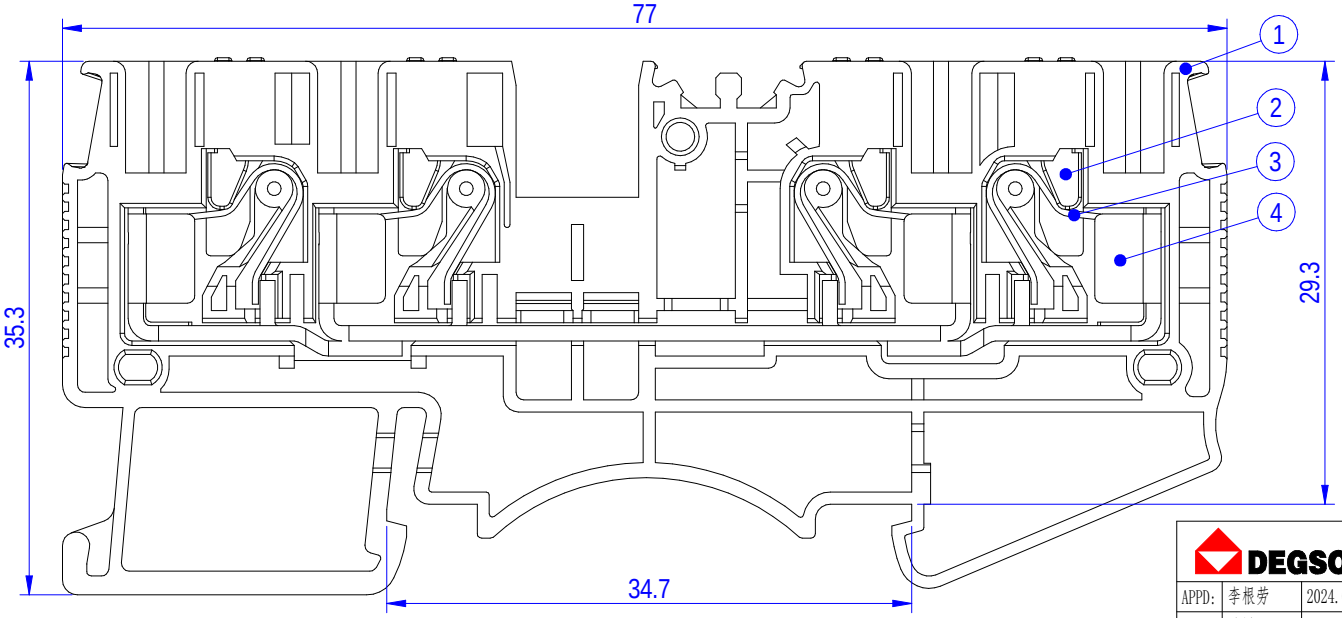

未注公差/General tolerances(mm)														
0 ~ 3	>3 ~ 6	>6 ~ 10	>10 ~ 18	>18 ~ 30	>30 ~ 50	>50 ~ 80	>80 ~ 120	>120 ~ 180	>180 ~ 250	>250 ~ 315	>315 ~ 400	>400 ~ 500	>500	0.1/10
±0.12	±0.18	±0.22	±0.26	±0.31	±0.37	±0.57	±0.80	±0.93	±1.05	±1.15	±1.60	±2.20	±2.50	±2°

ITEM	NAME OF PART	MATERIAL	NOTES
4	Current carrier	Copper	Sn plated
3	Spring	Stainless steel	/
2	Button	PA66-GF	UL94V-0
1	Housing	PA66	UL94V-0

UL 标准/UL Standard:	B	C	D
额定电压/电流/Rated Voltage(V)/Current(A)	600/30	600/30	600/5
IEC 标准/IEC Standard:			
过压类别/Overvoltage Category/污染等级/Pollution Degree	III/3	III/2	II/2
额定电压/电流/Rated Voltage(V)/Current(A)	800/32	/	/
额定脉冲电压(KV)/Rate Impulse Voltage(KV)	8	/	/
线径范围(硬线和软线)/Wire Range(rigid and flexible)(AWG/mm²)	24~ 10 / 0.2~ 4,6(SCL)		
间距/Pitch(mm)/线数范围/Poles	6.2		
剥线长度/Stripping length(mm)	10~ 12		
使用温度范围/Operating temperature(°C)	-40~ + 105		
符合RoHS环保要求/Conform to RoHS	Yes		
标准颜色编号/Standard color number: PANTONE/ RAL	/		

REV	ECN	DESCRIPTION	DRFT	DATE
01		Remove the EAC lettering	宗明忠	2024.06.28

DEGSON

APPD:	李根劳	2024.06.28
CHKD:	马恩开	2024.06.28
DRFT:	宗明忠	2024.06.28

A4 mm (inch)

MATERIAL:

SURFACE/COLOR:

MAT NO./REV: 11040000048-1 / 02.02

MAT STATUS: 批量

NAME: DS4-QU-01P-11-00A&Z(H)

DRAWING NO.	TYPE	DRAWING STATUS	SCALE	SHEET
200269468	CUSTOMER DRAWING	已发布	2:1	1/1

Transfer or duplication of this document as well as the utilization or communication of its contents are prohibited unless explicit authorization is granted. Violations will be liable for compensation. All rights reserved for patent, utility model or designs registrations. 除非经书面授权，否则禁止转让、复制、利用、交流本文件的内容，侵犯专利权或外观专利的所有权利。