D1RFRD006

REVISION RECORD				
REV	ECN	DESCRIPTION	DRFT	DATE
1	12-150	应客户要求修改耳脚长度公差及VDE参数	CHEN	09/07/12

W/O COVER VIEW

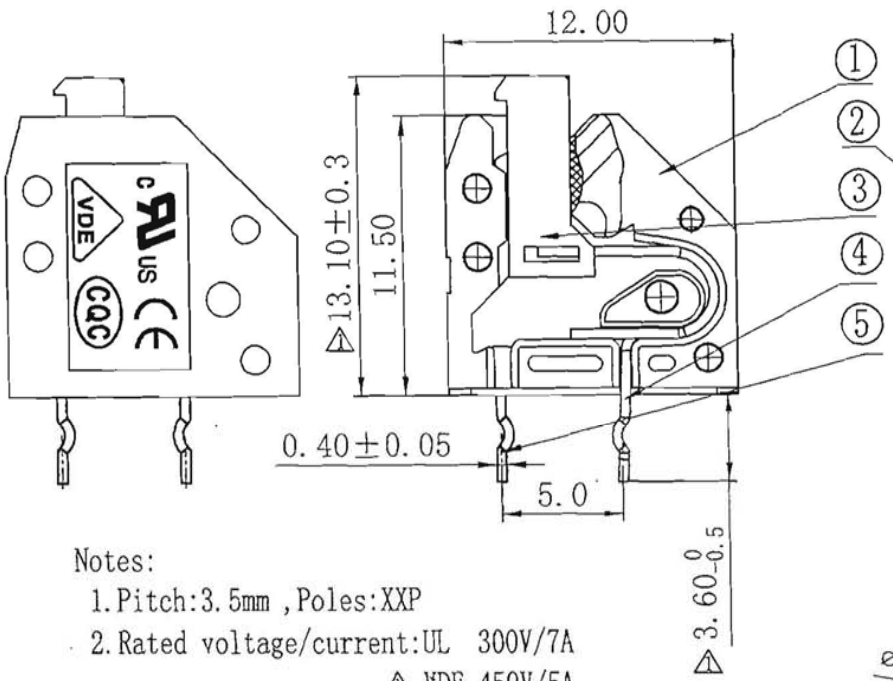

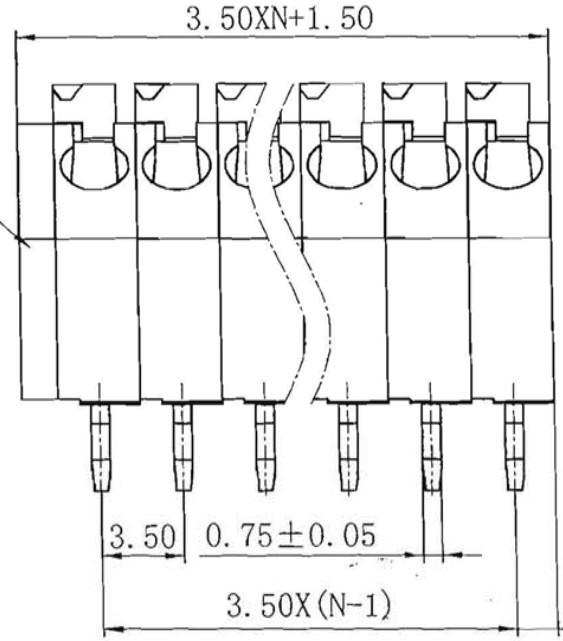

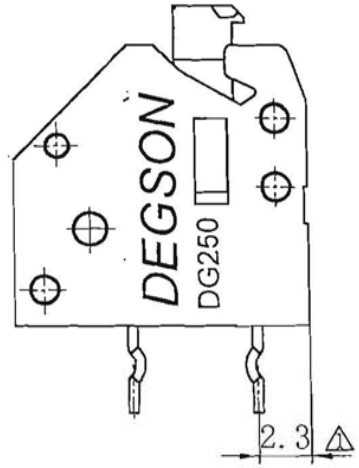

Notes:

1. Pitch:3.5mm ,Poles:XXP
2. Rated voltage/current:UL 300V/7A
   VDE 450V/5A
3. Operation temperatures:-40℃～+105℃
4. Withstanding Voltage:AC2500/1Min
5. Insulation Resistance:5000MΩ/DC1000V
6. Wire Range:22～18AWG, 0.2mm²～0.75mm²
7. Undimensioned Tolerances:

Pitch range in mm			Nominal dimension range in mm					
to 6	over 6 to 10	over 10 to 24	to 30	over 30 to 60	over 60 to 100	over 100 to 150	over 150	
±0.10	±0.15	±0.25	±0.2	±0.3	±0.5	±0.7	±1.0	0.05/10

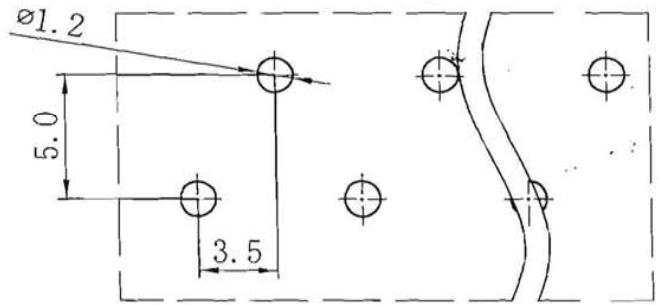

TOP VIEW-LAYOUT

宁波高正电子 内部发行 2014.7.10 文管中心 研发

ITEM	NAME OF PART	NO. OF PART	Q"TY	MATERIAL	NOTES
1	DG250-3.5-Housing(自动化)	3018A0Y01C(H)	XX	PA66	UL94V-0
5	DG250-3.5 big Pin header(自动化)	3018B00090(H)	(XX-1)/2 / XX/2	Phosphor bronze	SnCe plated
4	DG250-3.5 small Pin header(自动化)	3018B00100(H)	(XX+1)/2 / XX/2	Phosphor bronze	SnCe plated
3	DG250-3.5 Button(自动化)	3018D0Y01D(H)	XX	PA66	UL94V-0
2	DG250-3.5 Cover	3018C0Y01A(H)	1	PA66	UL94V-0

DETACHED LISTS

MM (INCH)
TOLERANCES EXCEPT AS NOTED
MM
.0 ±
.00 ±
.000 ±
ANGLES ± 1°
THIRD ANGLE PROJECTION

DFTD ZYH DATE 12/24/08
CHKD DATE 11/6/12
MFG DATE
APPVL DATE

MATERIAL :
G.E :
FINISH:
SCALE : 1:1

DEGSON® 宁波高正电子有限公司 DEGSON ELECTRONICS CO., LTD

NAME DG250-3.5-XXP-1Y-01A(H).
(自动化) 反装

DRAWING NO. DG250-3.5-E133
/PART NO.

SIZE A4 REV T1 09/07/12

DO NOT SCALE DRAWING SHEET 1 OF 1