REV	DESCRIPTION OF REVISIONS	DATE	DRAWN	CHECKED
A	FIRST RELEASE	03/05/1997	ST Ling	H Shen

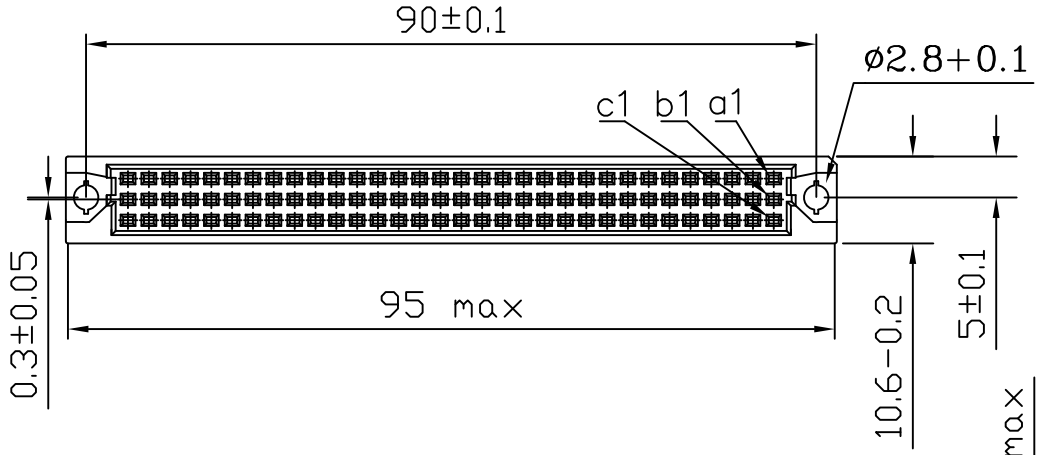

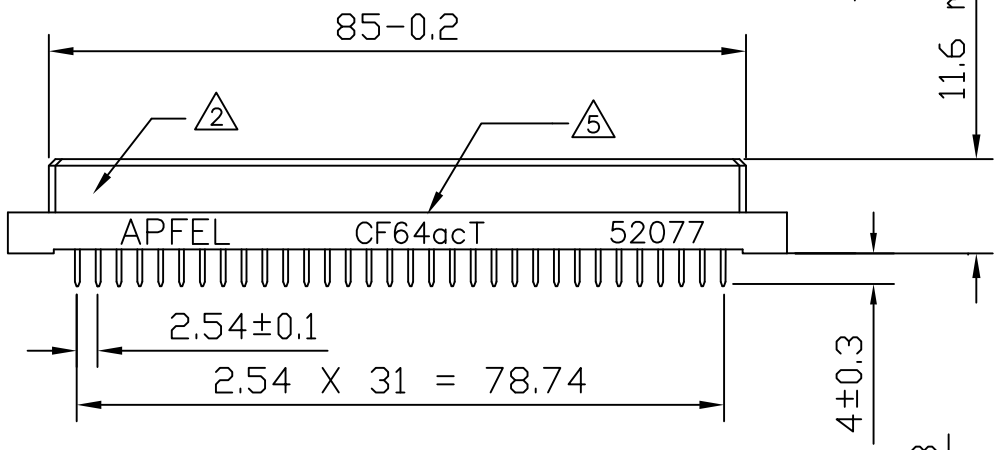

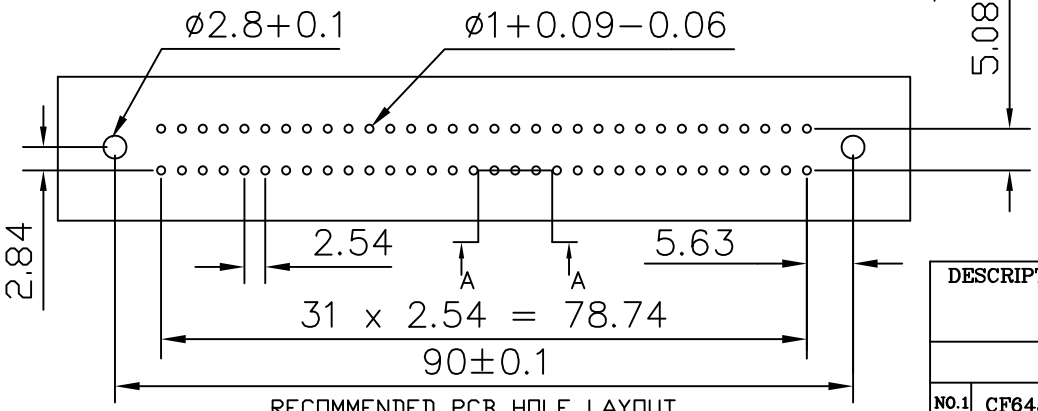

RECOMMENDED PCB HOLE LAYOUT
COMPONENT SIDE
SCALE 1 : 1

NOTES :

1. CONNECTOR MEETS REQUIREMENT OF DIN 41612
2. MATERIAL :
   -HOUSING : GLASS-FILLED PBT, COLOR GREY, UL 94V-0
   -CONTACT : COPPER ALLOY
3. CONTACT TAIL DIMENSION (THICKNESS x WIDTH x LENGTH)
   T : 0.3±0.02 x 0.64±0.04 x 4±0.3
4. CONTACT FINISH
   -1 : CLASS 1
   -2 : CLASS 2
   BLANK : CLASS 3
   -L : CONTACT LUBRICATED WITH LUBRICANT
5. CONNECTOR PRINTED WITH COMPANY NAME, PART NUMBER, AND BATCH NUMBER

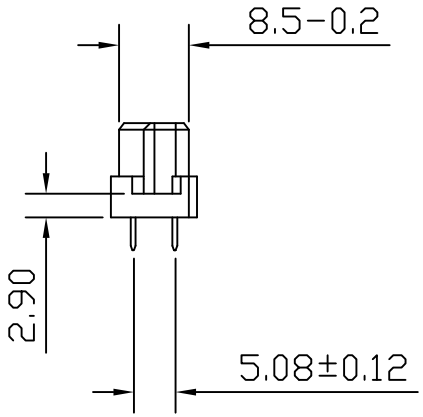

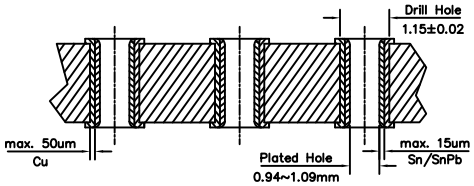

RECOMMENDED HOLE SPECIFICATIONS
SECTION A-A
SCALE 6 : 1

DESCRIPTION : FEMALE, TYPE C, 64 CONTACTS,
STRAIGHT SOLDER CONNECTORS
CUSTOMER DRAWING

PART NUMBER

NO.1	CF64acT-1	NO.4	CF64acT-1L
NO.2	CF64acT-2	NO.5	CF64acT-2L
NO.3	CF64acT	NO.5	CF64acT-L

APFEL

MILLIMETRE
X.XXX ±0.012
X.XX ±0.05
X.X ±0.1
X ±0.25

DRAWN	UNITS	ANGLE
ST Ling	mm	±1°
CHECKED	SCALE	REV
H Shen	1:1	A

DRAWING NO. A0010-1.DWG