SPEC

Product name: LED Streetlamp Lens
Part number: BK-LED-ST003-074
Product material: PC
Date: March 30, 2010

Made by: Cassie He

Contents

1. Spec.drawing……3

2. Dimensional drawing……...4

3. Optical evaluation report……5

4. Environmental requirement……6

LED Lens Spec.

Part No.	Photo	Product spec.	Led adaptation	Application
BK-LED-ST003-074	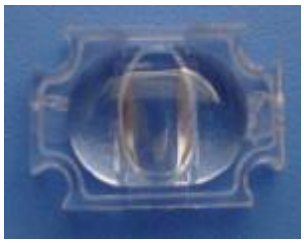	Diameter: 14.60*9.60mm Height: 5.13mm Angle: 122°*54°	CREE XP-E	Streetlamp

Dimensional Drawing

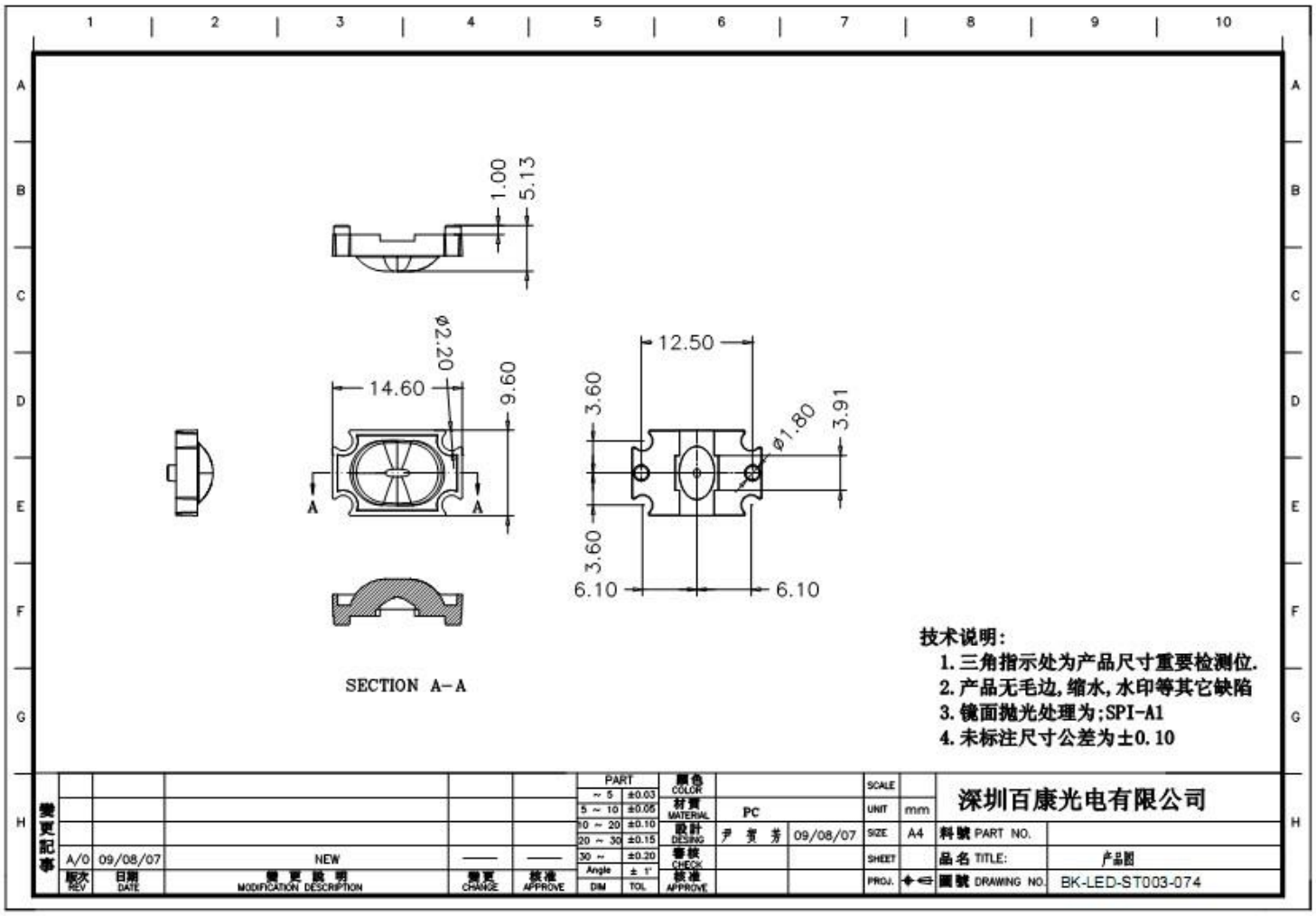

Optical Evaluation Report

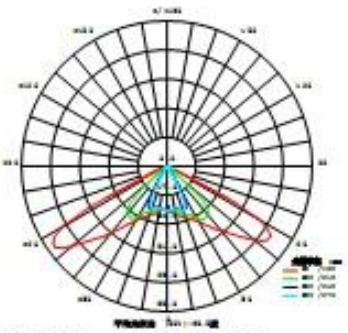

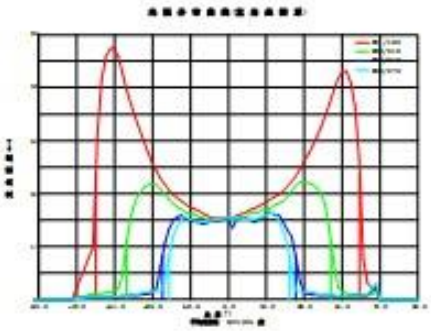

光强分布数据 :(角度° , 光强cd) C0 /180

角度	光强	角度	光强	角度	光强	角度	光强	角度	光强	角度	光强
-90.0	0	-58.0	77.87	-26.0	33.57	6.0	27.33	38.0	46.69	70.0	3.023
-88.0	0	-56.0	80.48	-24.0	32.44	8.0	27.83	40.0	49.34	72.0	0
-86.0	0	-54.0	80.73	-22.0	31.53	10.0	28.71	42.0	52.26	74.0	0
-84.0	0	-52.0	77.85	-20.0	30.46	12.0	29.14	44.0	55.44	76.0	0
-82.0	0	-50.0	72.56	-18.0	29.65	14.0	29.80	46.0	59.09	78.0	0
-80.0	0	-48.0	67.16	-16.0	29.00	16.0	30.47	48.0	62.88	80.0	0
-78.0	0	-46.0	62.41	-14.0	28.55	18.0	31.33	50.0	67.07	82.0	0
-76.0	0	-44.0	58.50	-12.0	27.51	20.0	32.20	52.0	70.83	84.0	0
-74.0	0	-42.0	54.67	-10.0	26.93	22.0	32.95	54.0	73.18	86.0	0
-72.0	3.357	-40.0	50.86	-8.0	26.19	24.0	33.68	56.0	73.29	88.0	0
-70.0	6.714	-38.0	47.17	-6.0	26.04	26.0	34.77	58.0	69.77	90.0	0
-68.0	10.07	-36.0	43.97	-4.0	26.03	28.0	36.18	60.0	62.34		
-66.0	13.43	-34.0	41.28	-2.0	26.00	30.0	37.76	62.0	49.20		
-64.0	16.79	-32.0	38.82	0.0	26.20	32.0	39.58	64.0	13.10		
-62.0	51.89	-30.0	36.81	2.0	26.37	34.0	41.88	66.0	5.200		
-60.0	70.30	-28.0	35.09	4.0	26.73	36.0	44.35	68.0	3.722		

电学参数：

工作电压： 0 V **工作电流：** 0 A
电功率： 0 W **功率因数：** 1.000

光学参数（测试距离：3.160m）：

总光通量： Φt = 933.1 lm **光效：** Eff= m/W
平均光强扩散角： θ(25%): 88.7° θ(50%): 85.5° θ(75%): 81.2° θ(10%): 113.3°
C0 /180: θ(25%): 127.3° θ(50%): 125.0° θ(75%): 121.8° θ(10%): 134.1°
C0 /180 Imax = 80.73 cd (G=-54.0°) Io = 26.20 cd

H(B)角度范围 :-90度 - 90度
H(B)角度间隔 : 0.5度
测试速度 : 快速
环境温度 :25.3℃
测试人员 :Ruibin
测试日期 :2009-07-18

V(B)角度范围 :-90度 - 90度
V(B)角度间隔 : 0.5度
测试系统 : 远方(EVERFINE)GO-SPEC316系统 V1.0.201
环境湿度 :65.0%
测试距离 :3.160米 [K=1.0000]
备注 :

Environmental Requirement

BK-LED-ST003-074 is agreed with SGS ROHS standard.