Electronics Source

ARDUINO UNO REV3

Code: A000066

Barcode: 7630049200050

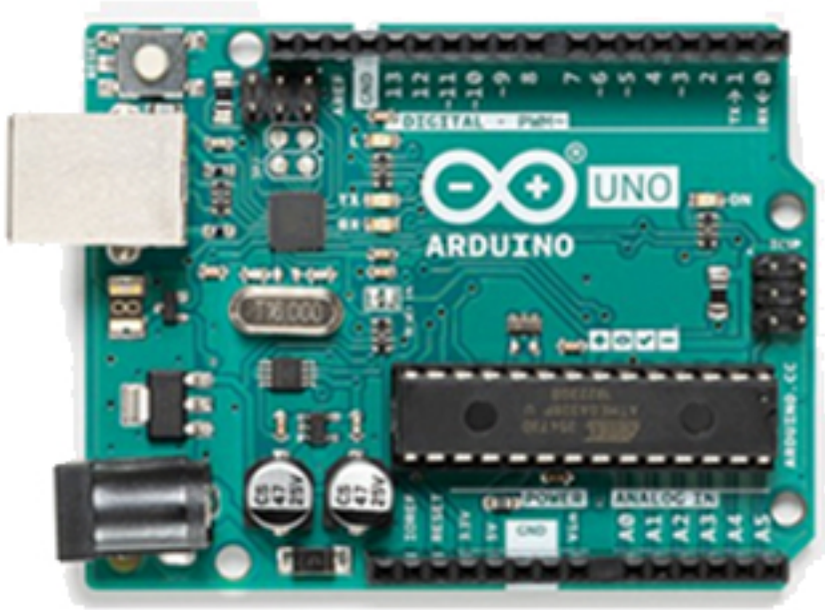

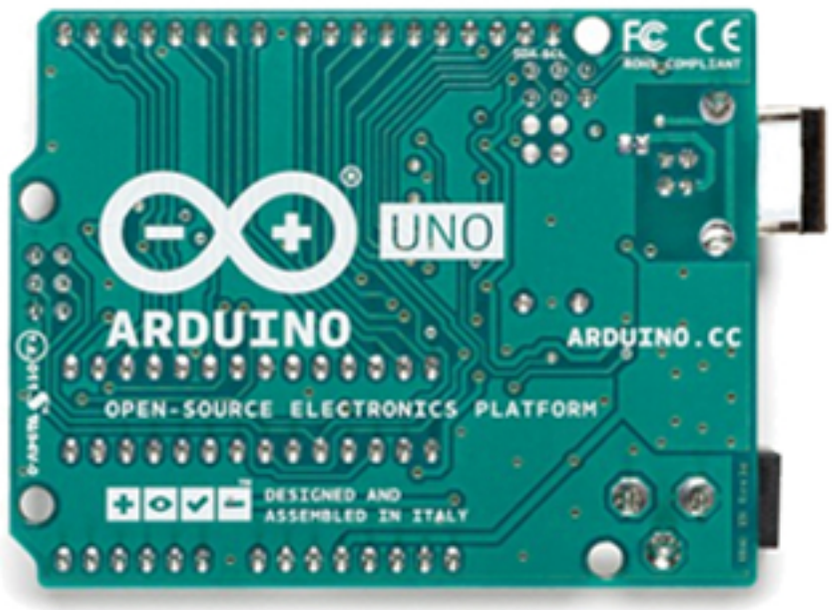

The **Arduino UNO** is the best board to get started with electronics and coding. If this is your first experience tinkering with the platform, the UNO is the most robust board you can start playing with. The UNO is the most used and documented board of the whole Arduino family.

OVERVIEW | TECH SPECS | DOCUMENTATION | FAQ

Microcontroller	ATmega328P
Operating Voltage	5V
Input Voltage (recommended)	7-12V
Input Voltage (limit)	6-20V
Digital I/O Pins	14 (of which 6 provide PWM output)
PWM Digital I/O Pins	6
Analog Input Pins	6
DC Current per I/O Pin	20 mA
DC Current for 3.3V Pin	50 mA
Flash Memory	32 KB (ATmega328P) of which 0.5 KB used by bootloader
SRAM	2 KB (ATmega328P)
EEPROM	1 KB (ATmega328P)
Clock Speed	16 MHz
LED_BUILTIN	13
Length	68.6 mm
Width	53.4 mm
Weight	25 g

Ordering Information

ES Part No. 0713-0009-9
MFR Part No A000066
Arduino UNO Rev3, ATMEGA328P, 16MHz, Flash Memory 32kBytes, SRAM 2kBytes, EEPROM 1kByte, Digital I/O 14 Pins, Analog Input 6 Pins

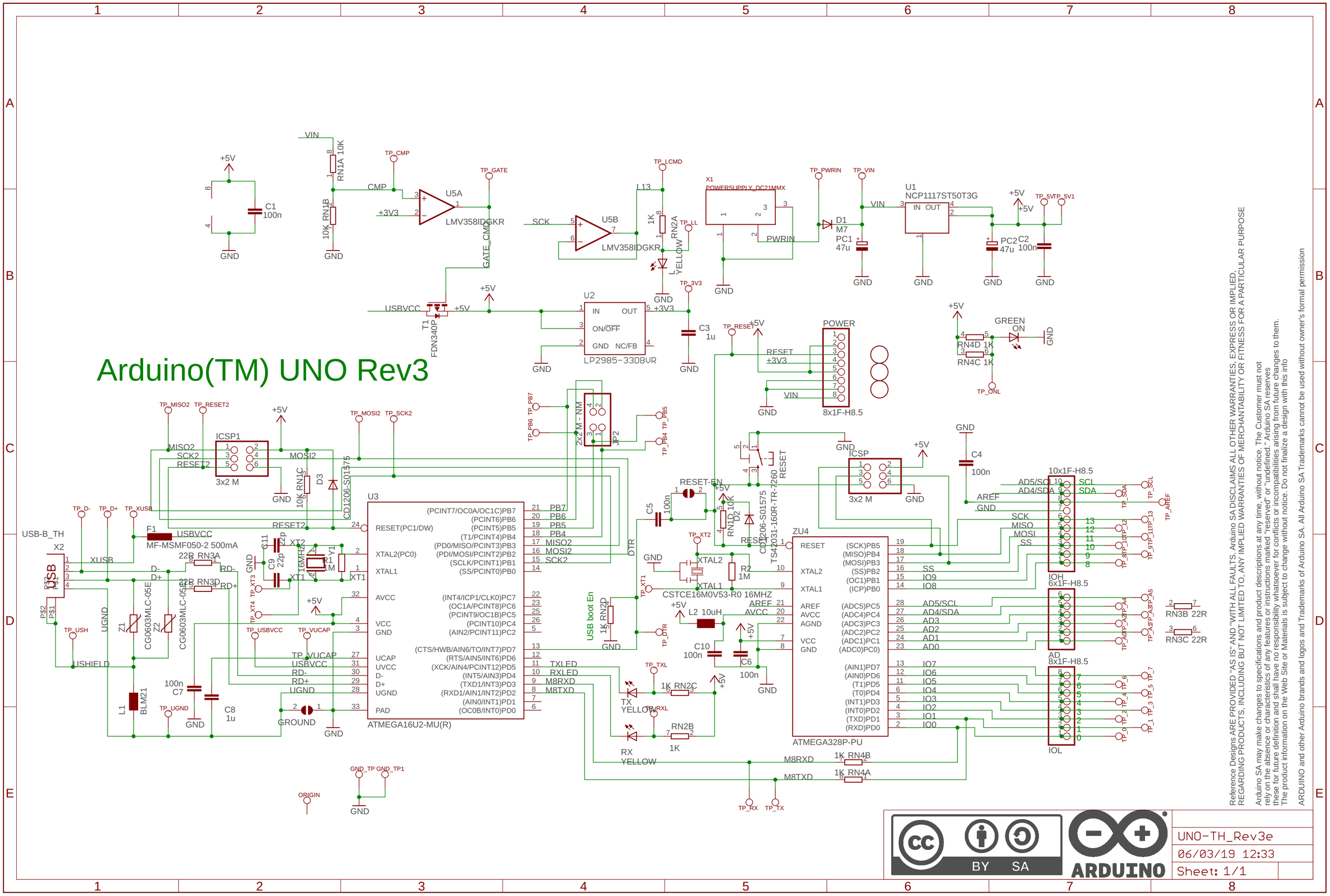
Arduino(TM) UNO Rev3
U3
ATMEGA16U2-MU(R)
ZU4
ATMEGA328P-PU
U1
NCP1117ST50T3G
U2
LP2985-33DBVR
U5A
LMV358IDGKR
U5B
LMV358IDGKR
X1
POWERSUPPLY_DC21MMX
X2
USB-B_TH
ICSP1
3x2 M
ICSP
3x2 M
POWER
8x1F-H8.5
10x1F-H8.5
IOH
6x1F-H8.5
AD
8x1F-H8.5
IOL
CSTCE16M0V53-R0 16MHZ
TS42031-160R-TR-7260
CD1206-S01575
CG0603MLC-05E
BLM21
MF-MSMF050-2 500mA
FDN340P
YELLOW
GREEN
ON
TX
YELLOW
RX
YELLOW
USB boot En
Reference Designs ARE PROVIDED "AS IS" AND "WITH ALL FAULTS. Arduino SA DISCLAIMS ALL OTHER WARRANTIES, EXPRESS OR IMPLIED, REGARDING PRODUCTS, INCLUDING BUT NOT LIMITED TO, ANY IMPLIED WARRANTIES OF MERCHANTABILITY OR FITNESS FOR A PARTICULAR PURPOSE
Arduino SA may make changes to specifications and product descriptions at any time, without notice. The Customer must not rely on the absence or characteristics of any features or instructions marked "reserved" or "undefined." Arduino SA reserves these for future definition and shall have no responsibility whatsoever for conflicts or incompatibilities arising from future changes to them. The product information on the Web Site or Materials is subject to change without notice. Do not finalize a design with this info
ARDUINO and other Arduino brands and logos and Trademarks of Arduino SA. All Arduino SA Trademarks cannot be used without owner's formal permission
BY SA
ARDUINO
UNO-TH_Rev3e
06/03/19 12:33
Sheet: 1/1

ARDUINO

ARDUINO UNO REV3

STORE.ARDUINO.CC/UNO-REV3

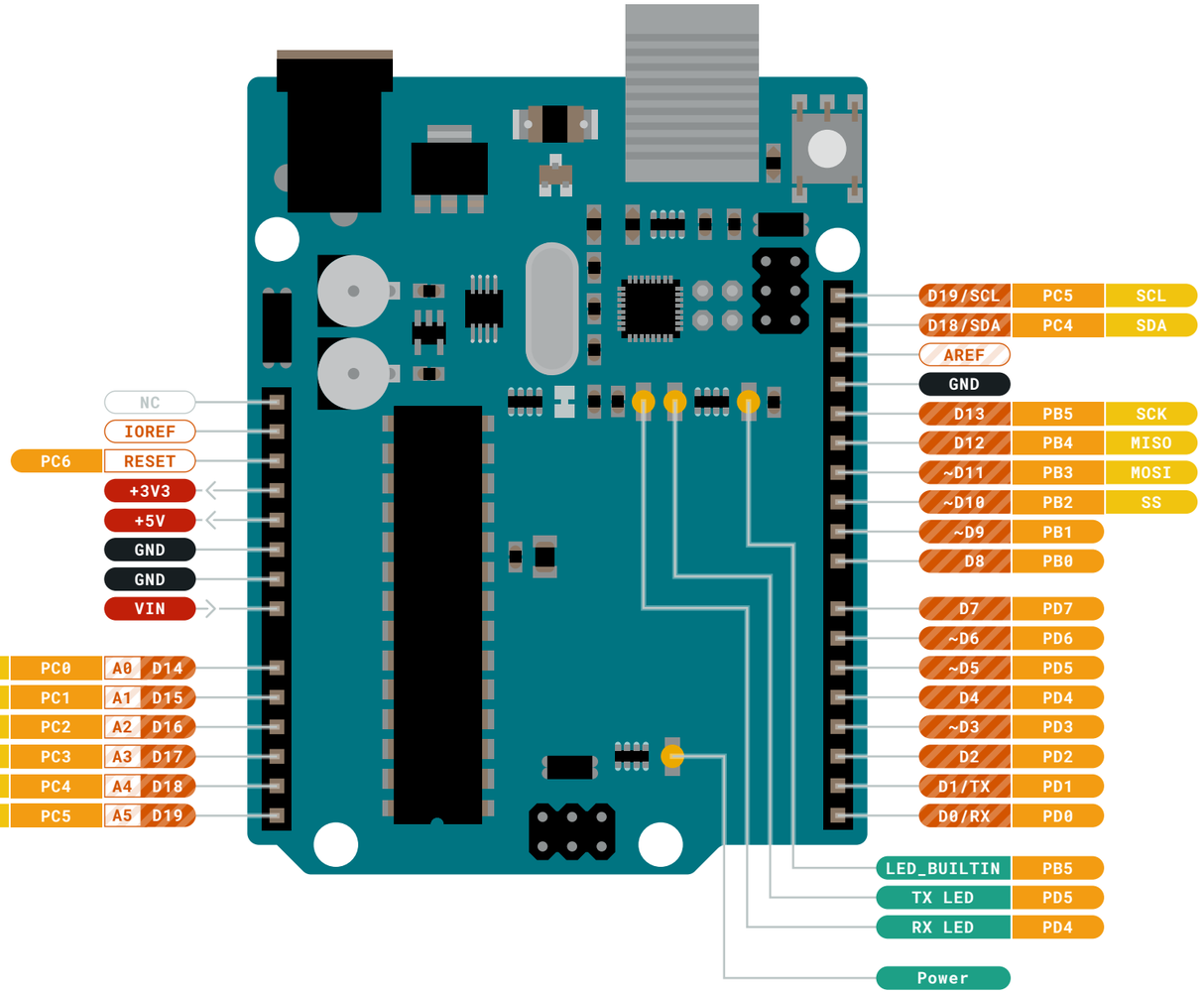

- Ground
- Power
- LED
- Internal Pin
- SWD Pin
- Digital Pin
- Analog Pin
- Other Pin
- Microcontroller's Port
- Default

MAXIMUM current per I/O pin is 20mA

MAXIMUM current per +3.3V pin is 50mA

VIN 6-20 V input to the board.

ARDUINO.CC

Last update: 17/06/2020

This work is licensed under the Creative Commons Attribution-ShareAlike 4.0 International License. To view a copy of this license, visit http://creativecommons.org/licenses/by-sa/4.0/ or send a letter to Creative Commons, PO Box 1866, Mountain View, CA 94042, USA.

ARDUINO

ARDUINO UNO REV3

STORE.ARDUINO.CC/UNO-REV3

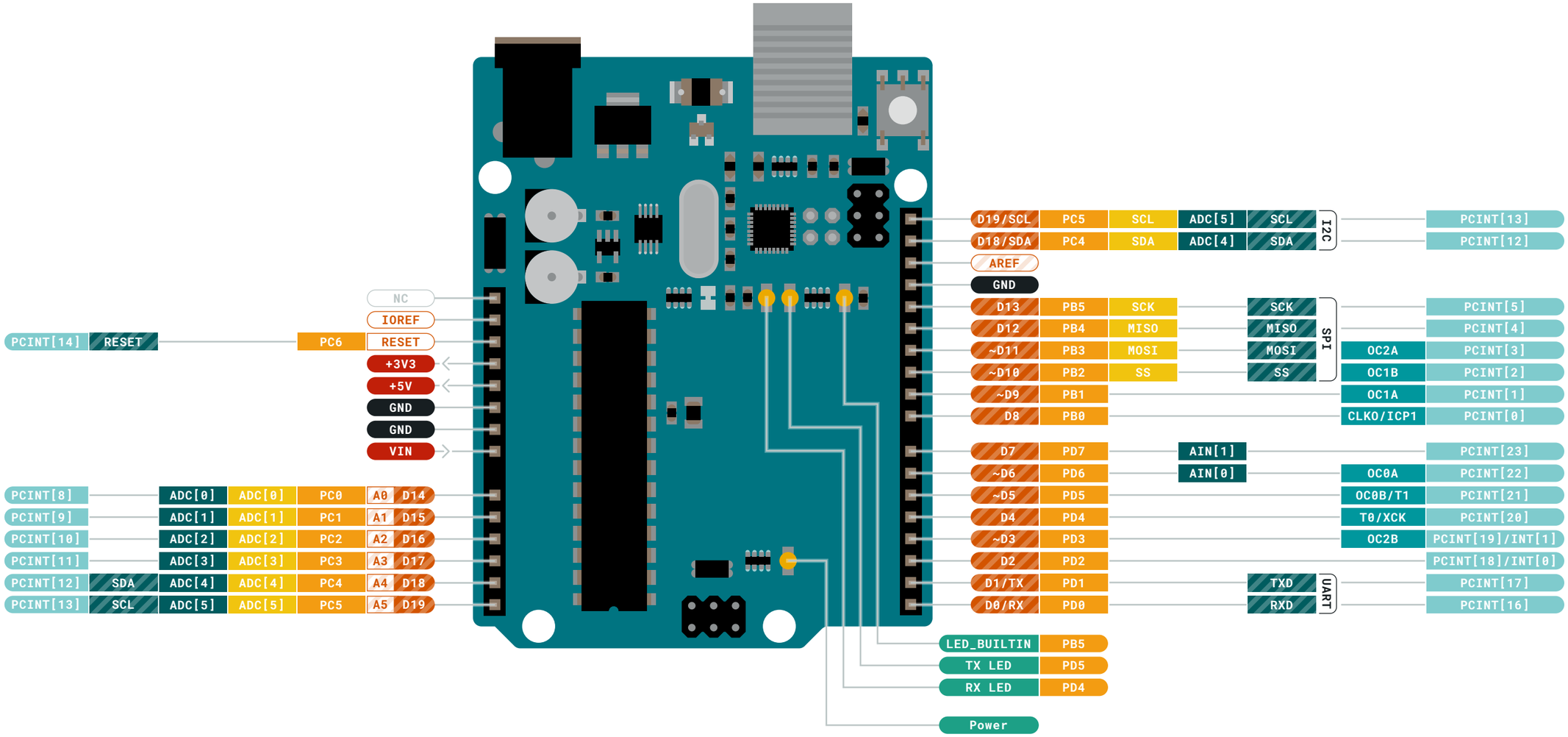

- Ground
- Power
- LED
- Internal Pin
- SWD Pin
- Digital Pin
- Analog Pin
- Other Pin
- Microcontroller's Port
- Default
- Analog
- Communication
- Timer
- Interrupt
- Sercom

MAXIMUM current per I/O pin is 20mA

MAXIMUM current per +3.3V pin is 50mA

VIN 6-20 V input to the board.

ARDUINO.CC

Last update: 17/06/2020

This work is licensed under the Creative Commons Attribution-ShareAlike 4.0 International License. To view a copy of this license, visit http://creativecommons.org/licenses/by-sa/4.0/ or send a letter to Creative Commons, PO Box 1866, Mountain View, CA 94042, USA.

ARDUINO UNO REV3

STORE.ARDUINO.CC/UNO-REV3

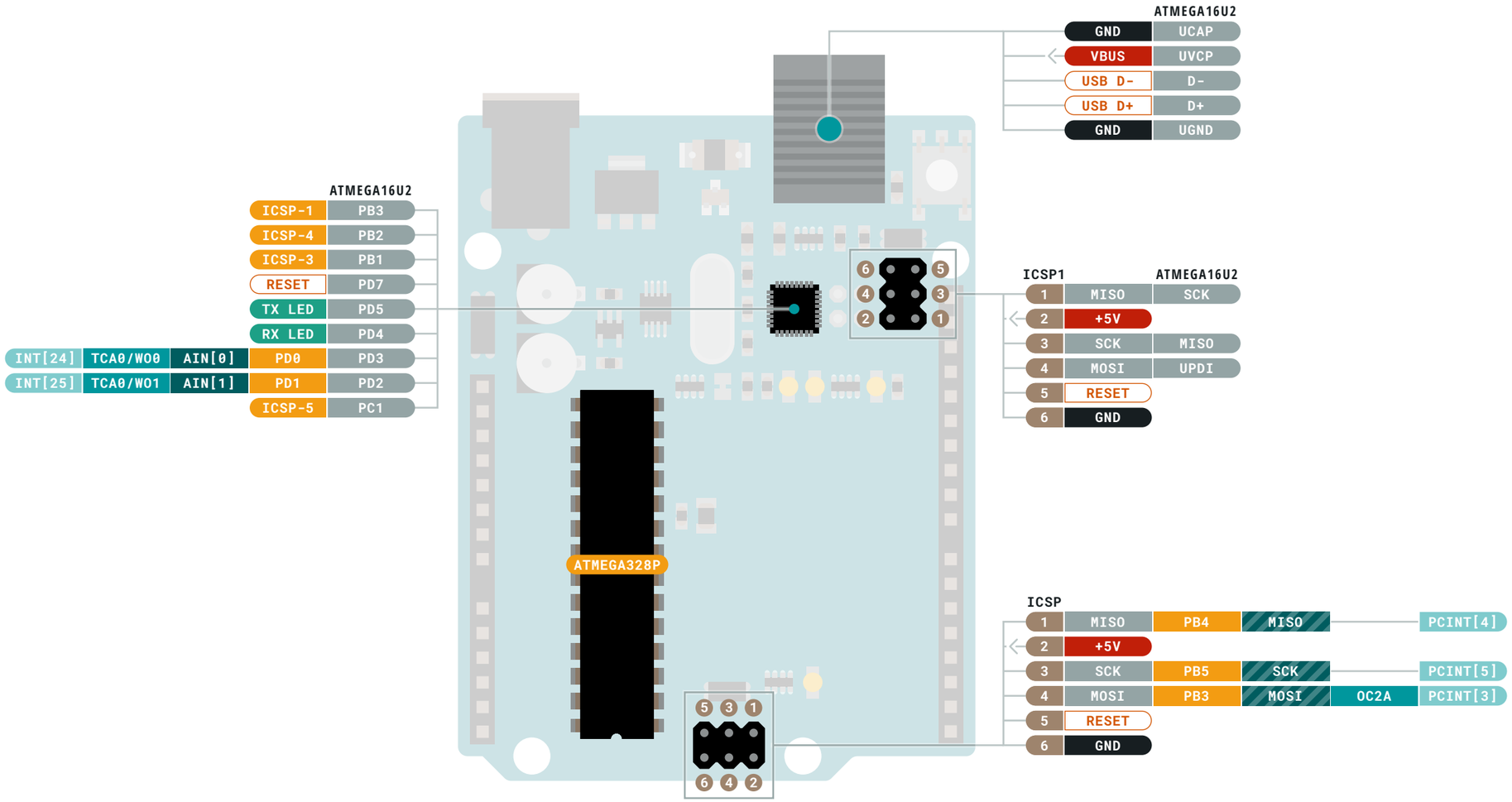

- Ground
- Power
- LED
- Internal Pin
- SWD Pin
- Digital Pin
- Analog Pin
- Other Pin
- Microcontroller's Port
- Default
- Analog
- Communication
- Timer
- Interrupt
- Sercom

MAXIMUM current per I/O pin is 20mA

MAXIMUM current per +3.3V pin is 50mA

VIN 6-20 V input to the board.

ARDUINO.CC

Last update: 17/06/2020

This work is licensed under the Creative Commons Attribution-ShareAlike 4.0 International License. To view a copy of this license, visit http://creativecommons.org/licenses/by-sa/4.0/ or send a letter to Creative Commons, PO Box 1866, Mountain View, CA 94042, USA.

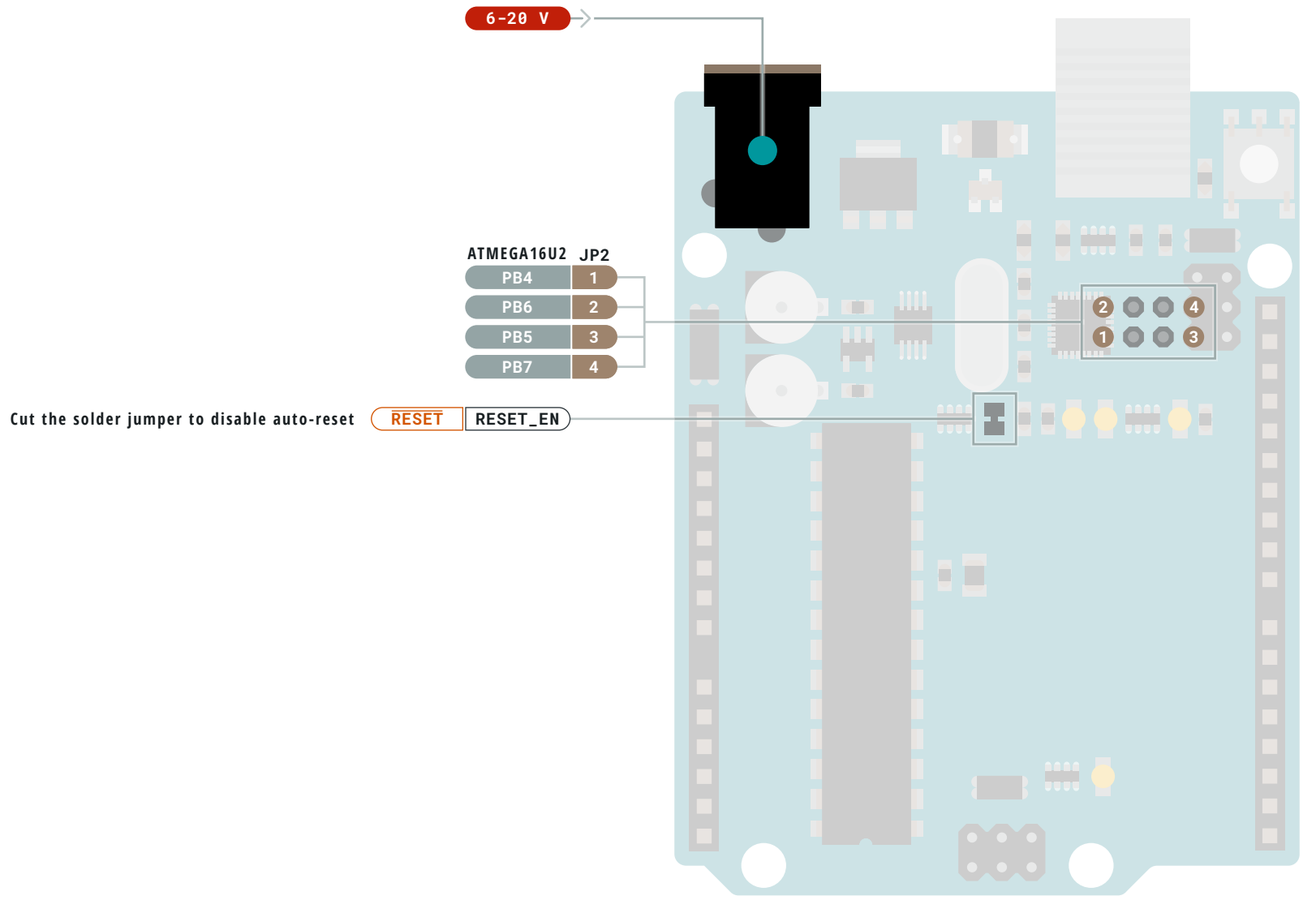

Ground
Power
LED
Internal Pin
SWD Pin

Digital Pin
Analog Pin
Other Pin
Microcontroller's Port
Default

SJ Pin
Making a short circuit using the solder jumper allows only the function in the SJ Pin cells.

MAXIMUM current per I/O pin is 20mA

MAXIMUM current per +3.3V pin is 50mA

VIN 6-20 V input to the board.

ARDUINO.CC

Last update: 17/06/2020

This work is licensed under the Creative Commons Attribution-ShareAlike 4.0 International License. To view a copy of this license, visit http://creativecommons.org/licenses/by-sa/4.0/ or send a letter to Creative Commons, PO Box 1866, Mountain View, CA 94042, USA.