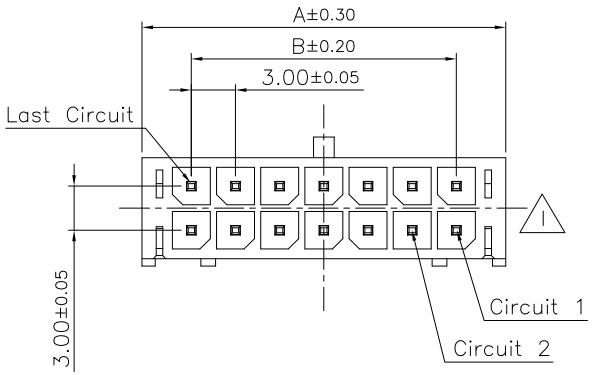

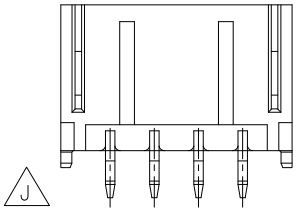

2P~8P:All Kink

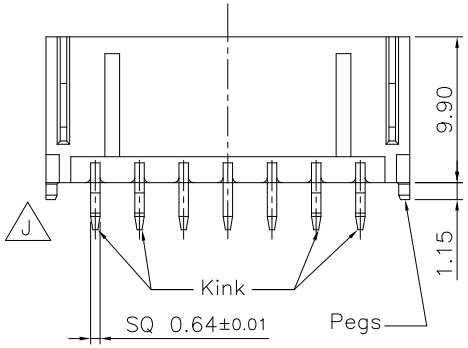

10P~24P:The first 4pin kink and last 4pin Kink

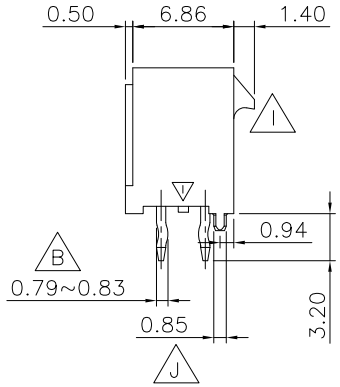

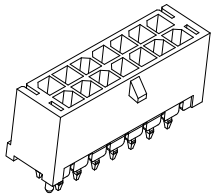

Specifications:
Current Rating:5.0A AC/DC
Voltage Rating:250V AC/DC
Contact Resistance:10m ohm. Max.
Insulation Resistance:1000M ohm. Min.
Withstanding Voltage:AC 1500V AC/minute
Operating Temperature Range:−25°C ~ +105°C

Material and Finish
Insulator:LCP UL94V−0
Insulator Color:Black
Contact:Copper Alloy
Finish:Tin/Gold Plated

How to Order
5561S−XXX
- Blank Tin Plated
- G:Gold Plated J
- SG15:15u" Gold Plated On Contact Area, Matte Tin On Solder Tail. K
- No. of Contacts
- Straight

Circuits	Dimension		Circuits	Dimension	
	A	B		A	B
2	6.7	—	14	24.7	18.0
4	9.7	3.0	16	27.7	21.0
6	12.7	6.0	18	30.7	24.0
8	15.7	9.0	20	33.7	27.0
10	18.7	12.0	22	36.7	30.0
12	21.7	15.0	24	39.7	33.0

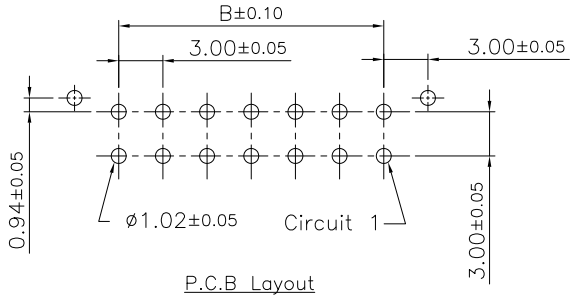

P.C.B Layout

RoHS Compliant

REV	DATE	FILE	BY
L			
K	28−Nov−2022	Add Plated Options	Lucy Du
J	25−Feb−2022	Amend Peg Add Gold Options	Lisy Liu
I	02−Feb−2017	防呆孔圖面修改	Jamie Wang
H	12−Jun−2016	ECN−TW1605016	Blake Huang
A	07−Mar−2016	(P0001)	Justin Ho

DRAWN: Justin Ho
CHECKED: Jerry Chen
APPROVAL: Mike Wu

GENERAL TOLERANCE:
.X=±0.20
.XX=±0.15

UNIT: MM
SCALE: 1:1
SHEET: 1/2
PROJECTION:

Neltron Connectors **Neltron Industrial Co., Ltd.**

DESCRIPTION: 3.0mm Pitch Power Wafer Straight Type

PART NO: 5561S−XXX J

SIZE **A4**

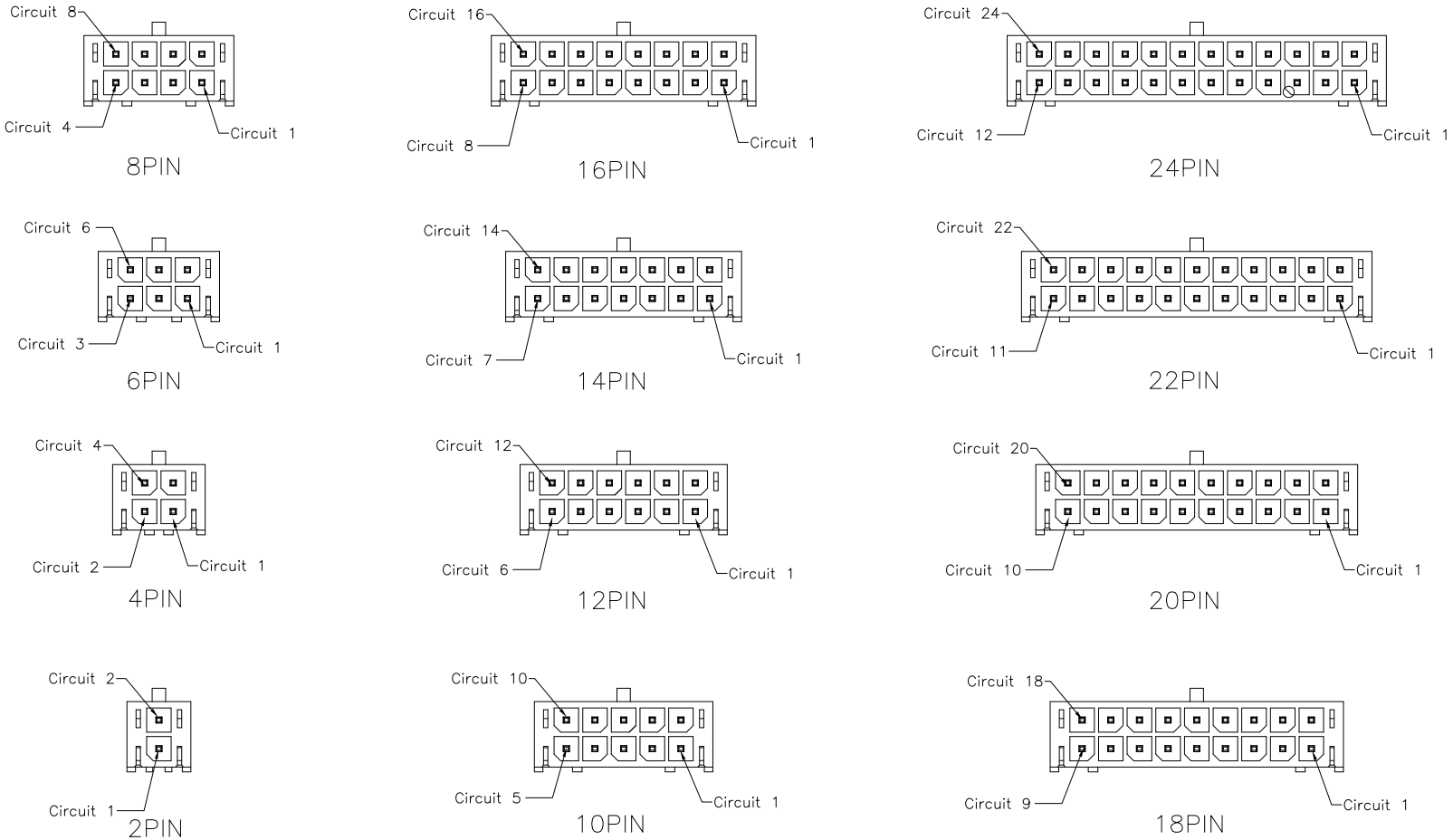

2~24P Protection Key Drawing(Ref.)

RoHS Compliant

REV	DATE	FILE	BY
L			
K	28-Nov-2022	Add Plated Options	Lucy Du
J	25-Feb-2022	Amend Peg Add Gold Options	Lisy Liu
I	02-Feb-2017	防呆孔圖面修改	Jamie Wang
H	12-Jun-2016	ECN-TW1605016	Blake Huang
A	07-Mar-2016	(P0001)	Justin Ho

DRAWN: Justin Ho

CHECKED: Jerry Chen

APPROVAL: Mike Wu

GENERAL TOLERANCE:
.X=±0.20
.XX=±0.15

UNIT: MM

SCALE: 1:1

SHEET: 2/2

PROJECTION:

Neltron Connectors **Neltron Industrial Co., Ltd.**

DESCRIPTION: 3.0mm Pitch Power Wafer Straight Type

PART NO: 5561S-XXX (J)

SIZE **A4**