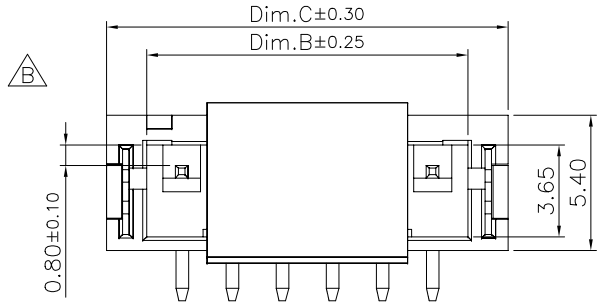

Pin No.	Dim.A	Dim.B	Dim.C
2	2.00	4.80	8.00
3	4.00	6.80	10.00
4	6.00	8.80	12.00
5	8.00	10.80	14.00
6	10.00	12.80	16.00
7	12.00	14.80	18.00
8	14.00	16.80	20.00
9	16.00	18.80	22.00
10	18.00	20.80	24.00
11	20.00	22.80	26.00
12	22.00	24.80	28.00
13	24.00	26.80	30.00
14	26.00	28.80	32.00
15	28.00	30.80	34.00
16	30.00	32.80	36.00

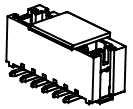

Specifications:
Current Rating:2.0A AC/DC
Voltage Rating:100V AC/DC
Contact Resistance:20m ohm. max.
Insulation Resistance:1,000M ohm. min.
B Withstanding Voltage:800V For One Minute
Operating Temperature Range:−25°C ~ +85°C

Material and Finish
Insulator:LCP (UL94V−0)
Insulator Color:Beige
Contact:Brass
Solder Tab:Phosphor Bronze
B Plated:Tin/Gold Plated

How To Order
2417SJ−XXX−SM2−CR
- CR: Cap+Tape&Reel
- SM2: SMD Type
- XXX: Blank Tin Plated / G:Gold Plated (B) / No Of Contacts
- SJ: Straight

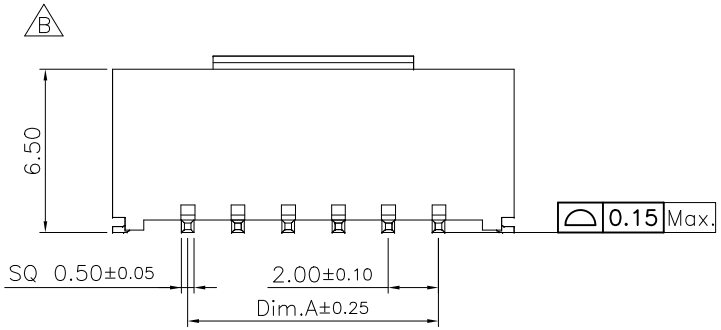

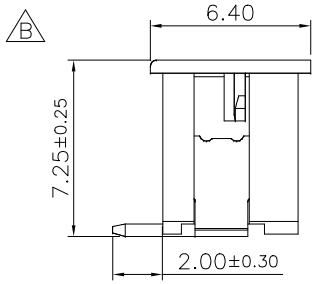

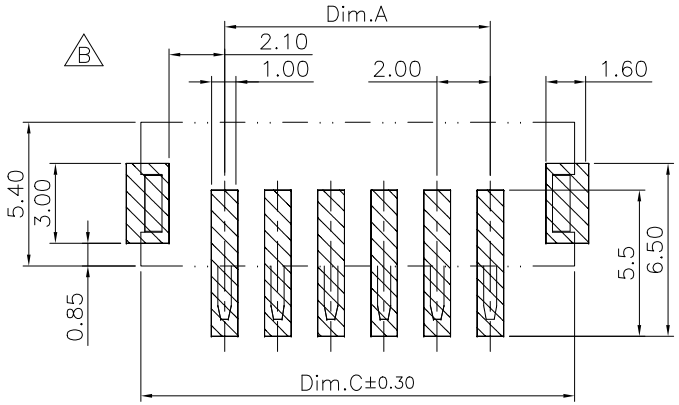

P.C.B Layout
Tolerance:±0.05

RoHS Compliant

REV	DATE	FILE	BY
F			
E			
D			
C			
B	20−JUL−2023	B	Jamie
A	04−NOV−2020	(PC0619−PC0621)	Lisy

DRAWN: Lisy Liu
CHECKED: Jerry Chen
APPROVAL: Rory Chen

GENERAL TOLERANCE:
.X=±0.25
.XX=±0.20
.XXX=±0.05

UNIT: MM
SCALE:
SHEET: 1/2
PROJECTION:

Neltron Connectors **Neltron Industrial Co., Ltd.**

DESCRIPTION: 2.00mm Pitch Wafer TOP Entry SMT Type

PART NO: 2417SJ−XXX−SM2−CR

SIZE **A4**